DOWNHOLE PUMP PARTS AND ACCESSORIES PRODUCT CATALOGUE

Dura Products
PO Box1690
Swift Current, Saskatchewan,
Canada S9H 4G6
Telephone (306) 773-0627

distributionnow.com
techservicesgrp.com

OUR CUSTOMERS ARE PRIORITY ONE

Downhole Pump Parts and Accessories

TABLE OF CONTENTS

SECTION 1: PUMPS 4

API Pump Designation 5
Rod Insert Pumps 7
Tubing Pumps 29
Two-Stage Pumps 47
Oversized Tubing Pumps 57
Pull Tube Pumps 75
Duplex Pumps 101
Production Accessories 107

SECTION 2: PUMP COMPONENTS 113

Balls & Seats 117
Barrels 123
Bushings 129
Cages 145
Connectors 163
Couplings 171
Cups 193
Drain, Tubing 199
Fin Seal 201
Guides 203
Hold-Downs 215
Lift Subs 245
Locks 247
Mandrels 251
Nipples 261
Nuts 269
On-Off Tools 273
Plug 277
Plungers 281
Pull Tube 295
Puller 297
Pressure Control Regulator 299
Rings 301
Rods 305
Seats 309
Spacer 313
Stuffing Boxes 315
Universal Pump Hold-Down (UPHD) 325
Valves 329
Wipers 337

Pumps

Dura Products™
A DISTRIBUTION NOW® COMPANY

(1)	(2)	(3)	(4)	(5)
Type of Pump	Letter Designation			
	Metal Plunger Pumps		Soft Packed Plunger Pumps	
	Heavy-wall Barrel	Thin-wall Barrel	Heavy-wall Barrel	Thin-wall Barrel
Rod Pumps				
Stationary Barrel, Top Anchor	RHA	RWA	—	RSA
Stationary Barrel, Bottom Anchor	RHB	RWB	—	RSB
Stationary Barrel, Bottom Anchor	RXB	—	—	—
Travelling Barrel, Bottom Anchor	RHT	RWT	—	RST
Tubing Pumps	TH	—	TP	—

XX - XXX X X X X X - X - X - X

Tubing size:
- **15** [1.900 in. (48.3 mm) OD]
- **20** [2-3/8 in. (60.3 mm) OD]
- **25** [2-7/8 in. (73.0 mm) OD]
- **30** [3-1/2 in. (88.9 mm) OD]
- **40** [4-1/2 in. (114.3 mm) OD]

Pump Bore (basic):
- **125** [1-1/4 in. (31.8 mm)]
- **150** [1-1/2 in. (38.1 mm)]
- **175** [1-3/4 in. (44.5 mm)]
- **178** [1-25/32 in. (45.2 mm)]
- **200** [2 in. (50.8 mm)]
- **225** [2-1/4 in. (57.2 mm)]
- **250** [2-1/2 in. (63.5 mm)]
- **275** [2-3/4 in. (69.9 mm)]
- **375** [3-3/4 in. (95.3 mm)]

Type Pump:
- **R** (rod)
- **T** (tubing)

Type Barrel:
- **H** (heavy wall for metal plunger pumps)
- **W** (thin wall for metal plunger pumps)
- **P** (heavy wall for soft-packed plunger pumps)
- **S** (thin wall for soft-packed plunger pumps)
- **X** (heavy wall for metal plunger pumps, thin wall thread configuration)

Location of seating assembly:
- **A** (top)
- **B** (bottom)
- **T** (bottom, travelling barrel)

Type of seating assembly:
- **C** (cup)
- **M** (mechanical)

Barrel length in feet

Nominal plunger length in feet

Length of upper extension in whole feet

Length of lower extension in whole feet

METRIC EQUIVALENTS	
1 ft	0.305 m
2 ft	0.610 m
3 ft	0.914 m
4 ft	1.219 m
5 ft	1.524 m
6 ft	1.829 m
7 ft	2.134 m
8 ft	2.438 m
9 ft	2.743 m
10 ft	3.048 m
11 ft	3.353 m
12 ft	3.658 m
13 ft	3.962 m
14 ft	4.267 m
15 ft	4.572 m
16 ft	4.877 m
17 ft	5.182 m
18 ft	5.486 m
19 ft	5.791 m
20 ft	6.096 m
22 ft	6.706 m
24 ft	7.315 m
26 ft	7.925 m
28 ft	8.534 m
30 ft	9.144 m
32 ft	9.754 m
34 ft	10.363 m
36 ft	10.973 m
38 ft	11.582 m
40 ft	12.192 m

Information from API Spec 11AX 13th Edition Table B.1 and Figure B.1

ROD INSERT PUMPS

Dura Products™
A DISTRIBUTIONNOW™ COMPANY

RW PUMPS

These pumps are available in 1-1/4", 1-1/2", 2" and 2-1/2" bores and in barrel lengths ranging to 36'. The pumps shown here are equipped with either a top or bottom 3 cup hold-down, but other options are available. New features and improvements have been incorporated in the pumps to increase their efficiency in operations. The barrels are commonly available in steel or brass; see the barrels section for a complete product option. Pumps are shown with spray-metal plungers.

Standard equipment includes Dura-G-CH chrome plated steel barrels, spray-metal plungers, alloy steel 4 piece insert cages, alloy steel valve rod guides & fittings, titanium carbide ball with tungsten carbide seat valves and 3-cup top or bottom hold-downs. Optional equipment includes a variety of grades of balls & seats, barrels, plungers, cages, and fittings as listed in the "Pump Parts" section. Simplex top or bottom lock hold-downs, API bottom lock hold-downs, spray-metal plunger with NCA (Nickel-Copper Alloy) pins, top plunger valves or bottom plunger valve only. Double valves throughout are available if required. RW pumps with top hold-down (RWA) are recommended for shallow to moderate depth wells. They are particularly effective in sandy conditions since top suspension prevents sand from packing between barrel and tubing. The combination of spray-metal plunger, Dura G-CH steel chrome barrel and alloy steel fittings also resist the abrasive action of sand. This type pump is also recommended for gassy, corrosive, or deviated hole conditions.

Pumps with bottom hold-down (RWB) are recommended for moderate to deep wells. This type pump is particularly effective in abrasive and mildly corrosive wells where the combination of a chrome plated barrel, spray-metal plunger and alloy steel fittings effectively resists the action of these two conditions. Under normal or moderate well conditions, the pump is an economical high volume producer.

Parts in these pump assemblies are made to API specifications, except for Dura specific components.

RWAC, 3 CUP HOLD-DOWN - See diagram next page

Item Description	Pump Size			
	2-3/8" x 1-1/4"	2-3/8" x 1-1/2"	2-7/8" x 2"	3-1/2" x 2-1/2"
Plunger Constant	0.182	0.262	0.466	0.729
S.R. Pin Connection	3/4"	3/4"	3/4"	3/4"
Fishing Neck OD	1-1/2"	1-1/2"	1-5/8"	1-5/8"
Barrel - OD	1.500"	1.750"	2.250"	2.750"
Barrel - Box Thread	1.3330"–16 UNS	1.5730"–16 UNS	2.0870"–16 UNS	2.5730"–16 UNS
Hold-Down No-Go OD	1.895"	1.895"	2.339"	2.839"
Seating Cup OD	1.810"	1.810"	2.320"	2.820"
Travelling Valve	1-1/4"	1-1/2"	2"	2-3/4"
Standing Valve	1-3/4"	1-3/4"	2-1/4"	2-3/4"
Gas Anchor Conn.	1"–11-1/2 LP	1"–11-1/2 LP	1-1/4"–11-1/2 LP	1-1/2"–11-1/2 LP
Pitch Length of Plunger - Nominal Length of Plunger Plus 3"				

Dura Products
A DISTRIBUTION NOW COMPANY

RWAC, 3 CUP HOLD-DOWN - See diagram next page

Item	Description	# Req'd	Part Numbers			
	Travelling Assembly		2-3/8" x 1-1/4"	2-3/8" x 1-1/2"	2-7/8" x 2"	3-1/2" x 2-1/2"
A	Bushing, Valve Rod With 3/4" Sucker Rod Pin	1	0608-0110-24	0608-0110-24	0608-0120-24	0608-0130-24
B[1]	Valve Rod	1	0656-072X-XX	0656-072X-XX	0656-092X-XX	0656-112X-XX
C	Coupling, Top Plunger	1	0628-4712-20	0628-4715-20	0628-4720-20	0628-4725-21
D[2]	Plunger, Pin End, 3' Metal Sprayed	1	0629-1203-XX	0629-1403-XX	0629-1903-XX	0629-2403-XX
	Plunger, Pin End, 4' Metal Sprayed		0629-1204-XX	0629-1404-XX	0629-1904-XX	0629-2404-XX
	Plunger, Pin End, 5' Metal Sprayed		0629-1205-XX	0629-1405-XX	0629-1905-XX	0629-2405-XX
	Plunger, Pin End, 6' Metal Sprayed		0629-1206-XX	0629-1406-XX	0629-1906-XX	0629-2406-XX
E	Bushing, Insert Cage	1	0622-1234-20	0622-1534-20	0622-2034-20	0622-2534-20
F	Gasket	1	0698-0929-00	0698-0930-00	0698-0932-00	0698-1041-00
G	Insert Cage	1	0622-1259-79	0622-1559-79	0622-2059-79	0622-2759-79
H	Shell, Insert Cage	1	0622-1273-20	0622-1573-20	0622-2073-20	0622-2573-20
I	Ball and Seat	1	0604-1211-16	0604-1514-16	0604-2018-16	0604-2724-16
J	Plug, Seat	1	0639-0512-10	0639-0515-10	0639-0520-10	0639-0525-10
	Standing Assembly					
K	Guide, Valve Rod	1	0658-1026-20	0658-1026-20	0658-2026-20	0658-3026-20
L[3] (Hold-Down)	Mandrel	1	0658-1001-10	0658-1001-10	0658-2001-10	0658-3001-10
	Seating Cup	3	2231-0110-80	2231-0110-80	2231-0114-10	2231-0906-10
	Spacer	2	0658-1004-10	0658-1004-10	0658-2004-10	0658-3004-10
	Lock Nut	1	0658-1005-10	0658-1005-10	0658-2005-10	0658-3005-10
	Barrel Bushing	1	0658-1208-10	0658-1308-10	0658-2508-10	0658-3708-10
M[4]	Barrel, Dura G-CH, Steel Chrome	1	0610-1206-XX	0610-1506-XX	0610-2006-XX	0610-2506-XX
N	Connector	1	0622-1737-22	0622-1737-20	0622-2237-20	0622-2737-20
O	Gasket	1	0698-0931-00	0698-0931-00	0698-0933-00	0698-1041-00
P	Insert Cage	1	0622-1759-79	0622-1759-79	0622-2259-79	0622-2759-79
Q	Shell, Insert Cage	1	0622-1773-20	0622-1773-20	0622-2273-20	0622-2773-20
R	Ball and Seat	1	0604-1716-16	0604-1716-16	0604-2220-16	0604-2724-16
S	Bushing , Seat, Barrel Cage	1	0608-0310-10	0608-0310-10	0608-0320-10	0608-0330-10
	Seating Nipple Recommended For EUE Tubing		0636-1210-12	0636-1210-12	0636-1220-12	0636-1230-12

1 - X's represent valve rod length in inches; this code is for unthreaded valve rod. Contact plant for proper length.
2 - XX represents plunger fit. Example 0629-1203-47 is a -.003" fit.
3 - Mechanical hold-downs available as direct replacements for the 3 cup hold-down assembly.
4 - XX represents the barrel length in feet. Contact plant for barrel length availability.

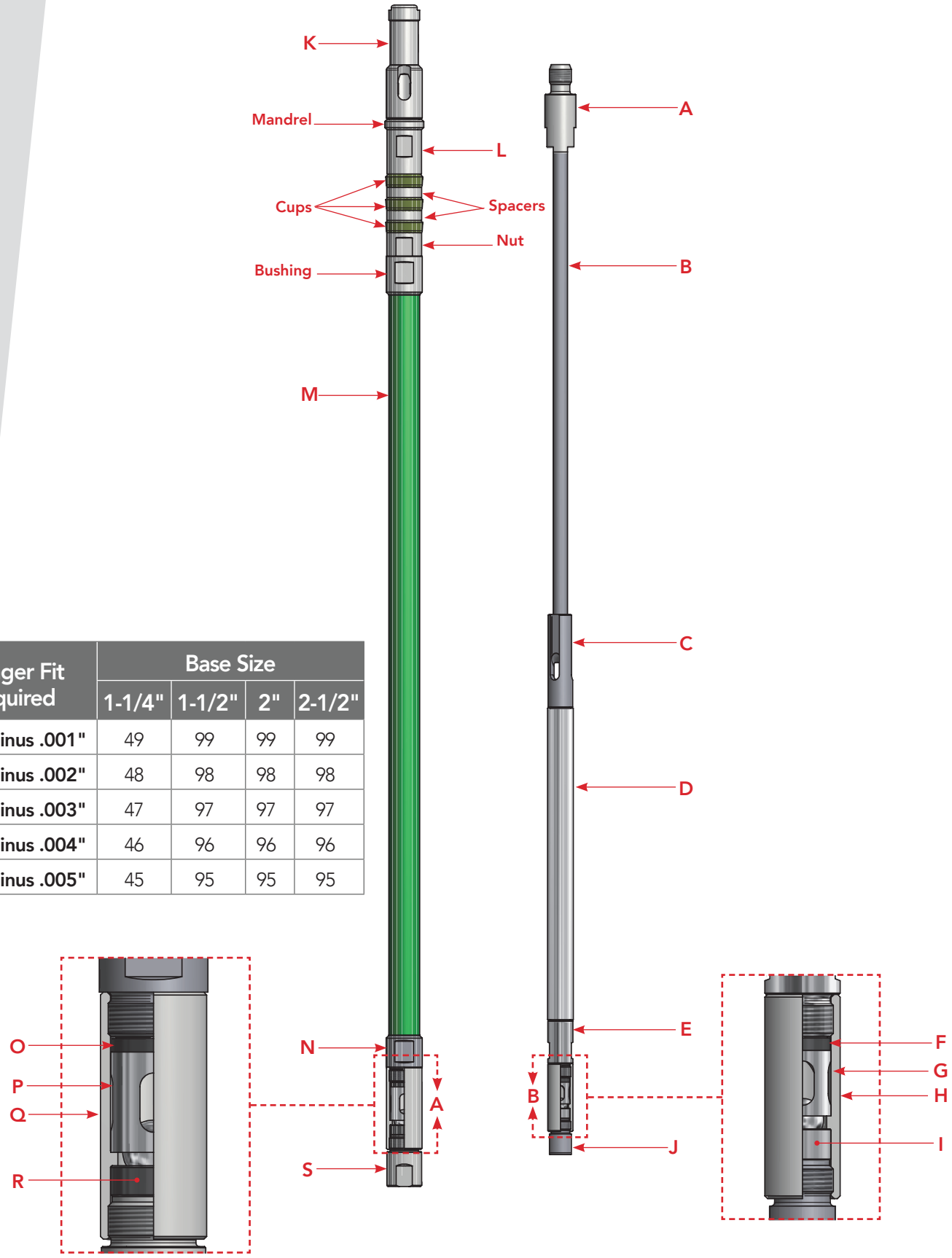

Plunger Fit Required	Base Size			
	1-1/4"	1-1/2"	2"	2-1/2"
Base Minus .001"	49	99	99	99
Base Minus .002"	48	98	98	98
Base Minus .003"	47	97	97	97
Base Minus .004"	46	96	96	96
Base Minus .005"	45	95	95	95

Rod Insert Pump, RWAC, 3 Cup Hold-Down

RWBC, 3 CUP HOLD-DOWN

Item Description	Pump Size			
	2-3/8" x 1-1/4"	2-3/8" x 1-1/2"	2-7/8" x 2"	3-1/2" x 2-1/2"
Plunger Constant	0.182	0.262	0.466	0.729
S.R. Pin Connection	3/4"	3/4"	3/4"	3/4"
Fishing Neck OD	1-1/2"	1-1/2"	1-5/8"	1-5/8"
Barrel - OD	1.500"	1.750"	2.250"	2.750"
Barrel - Box Thread	1.3330"–16 UNS	1.5730"–16 UNS	2.0870"–16 UNS	2.5730"–16 UNS
Hold-Down No-Go OD	1.895"	1.895"	2.339"	2.839"
Seating Cup OD	1.810"	1.810"	2.320"	2.820"
Travelling Valve	1-1/4"	1-1/2"	2"	2-3/4"
Standing Valve	1-3/4"	1-3/4"	2-1/4"	2-3/4"
Gas Anchor Conn.	1"–11-1/2 LP	1"–11-1/2 LP	1-1/4"–11-1/2 LP	1-1/2"–11-1/2 LP
Pitch Length of Plunger - Nominal Length of Plunger Plus 3"				

Dura Products
A DISTRIBUTION NOW COMPANY

RWBC, 3 CUP HOLD-DOWN - See diagram next page

Item	Description	# Req'd	Part Numbers			
	Travelling Assembly		2-3/8" x 1-1/4"	2-3/8" x 1-1/2"	2-7/8" x 2"	3-1/2" x 2-1/2"
A	Bushing, Valve Rod With 3/4" Sucker Rod Pin	1	0608-0110-24	0608-0110-24	0608-0120-24	0608-0130-24
B[1]	Valve Rod	1	0656-072X-XX	0656-072X-XX	0656-092X-XX	0656-112X-XX
C	Coupling, Top Plunger	1	0628-4712-20	0628-4715-20	0628-4720-20	0628-4725-21
D[2]	Plunger, Pin End, 3' Metal Sprayed	1	0629-1203-XX	0629-1403-XX	0629-1903-XX	0629-2403-XX
	Plunger, Pin End, 4' Metal Sprayed		0629-1204-XX	0629-1404-XX	0629-1904-XX	0629-2404-XX
	Plunger, Pin End, 5' Metal Sprayed		0629-1205-XX	0629-1405-XX	0629-1905-XX	0629-2405-XX
	Plunger, Pin End, 6' Metal Sprayed		0629-1206-XX	0629-1406-XX	0629-1906-XX	0629-2406-XX
E	Bushing, Insert Cage	1	0622-1234-20	0622-1534-20	0622-2034-20	0622-2534-20
F	Gasket	1	0698-0929-00	0698-0930-00	0698-0932-00	0698-1041-00
G	Insert Cage	1	0622-1259-79	0622-1559-79	0622-2059-79	0622-2759-79
H	Shell, Insert Cage	1	0622-1273-20	0622-1573-20	0622-2073-20	0622-2573-20
I	Ball and Seat	1	0604-1210-16	0604-1514-16	0604-2018-16	0604-2724-16
J	Plug, Seat	1	0639-0512-10	0639-0515-10	0639-0520-10	0639-0525-10
	Standing Assembly					
K	Guide, Valve Rod	1	0658-1026-20	0658-1026-20	0658-2026-20	0658-3026-20
L	Connector Guide Type	1	0626-1201-12	0626-1501-12	0626-2001-12	0626-2501-32
M[3]	Barrel, Dura G-CH, Steel Chrome	1	0610-1206-XX	0610-1506-XX	0610-2006-XX	0610-2506-XX
N	Connector, Insert Cage	1	0622-1737-22	0622-1737-20	0622-2237-20	0622-2737-20
O	Gasket	1	0698-0931-00	0698-0931-00	0698-0933-00	0698-1041-00
P	Insert Cage	1	0622-1759-79	0622-1759-79	0622-2259-79	0622-2759-79
Q	Shell, Insert Cage	1	0622-1773-20	0622-1773-20	0622-2273-20	0622-2773-20
R	Ball and Seat	1	0604-1716-16	0604-1716-16	0604-2220-16	0604-2724-16
S[4] (Hold-Down)	Mandrel	1	0658-1001-10	0658-1001-10	0658-2001-10	0658-3001-10
	Seating Cup	3	2231-0110-80	2231-0110-80	2231-0114-10	2231-0906-10
	Spacer	2	0658-1004-10	0658-1004-10	0658-2004-10	0658-3004-10
	Lock Nut	1	0658-1005-10	0658-1005-10	0658-2005-10	0658-3005-10
	Tapered Coupling	1	0658-1006-10	0658-1006-10	0658-2006-10	0658-3006-10
	Seating Nipple Recommended For EUE Tubing	1	0636-1210-12	0636-1210-12	0636-1220-12	0636-1230-12

1 - X's represent valve rod length in inches; this code is for unthreaded valve rod. Contact plant for proper length.
2 - XX represents plunger fit. Example 0629-1203-47 is a -.003" fit.
3 - XX represents the barrel length in feet. Contact plant for barrel length availability.
4 - Mechanical hold-downs available as direct replacements for the 3 cup hold-down assembly.

Plunger Fit Required	Base Size - Any Length Plunger			
	1-1/4" OD	1-1/2" OD	2" OD	2-1/2" OD
Base Minus .001"	49	99	99	99
Base Minus .002"	48	98	98	98
Base Minus .003"	47	97	97	97
Base Minus .004"	46	96	96	96
Base Minus .005"	45	95	95	95

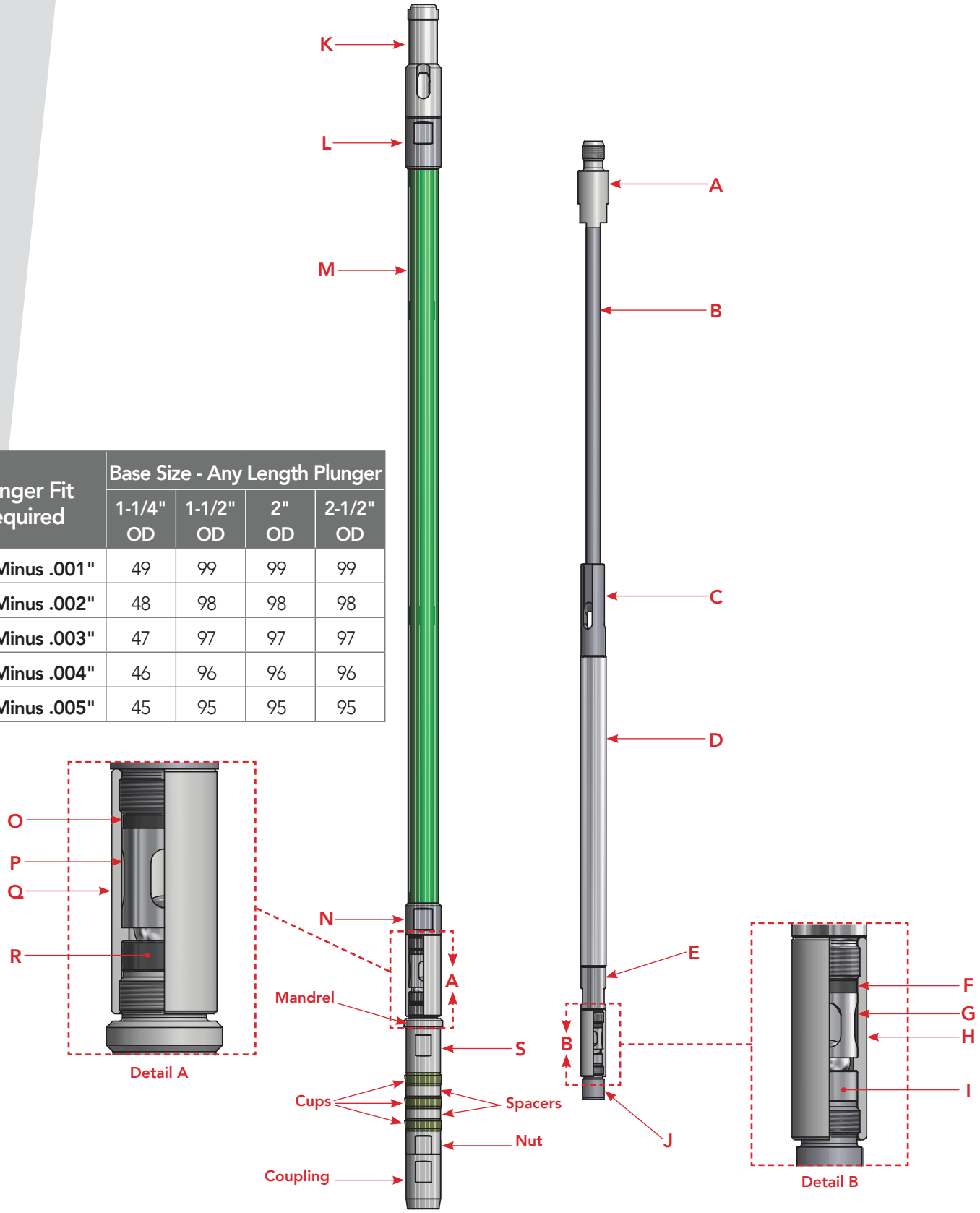

Rod Insert Pump, RWBC, 3 Cup Hold-Down

RH STROKE-THRU PUMPS

The RH Stroke-Thru Pump was developed for rugged service at medium to deep depths. The pump is composed of alloy steel fittings, 4 piece insert cages with titanium carbide ball & tungsten carbide seat, spray metal pin-end plunger, and Dura G-CH steel chrome plated heavy-wall barrel. The barrels are commonly available in steel or brass; see the barrels section for a complete product option. Pumps are shown with spray-metal plungers.

The barrel assembly of this pump is equipped with extension couplings that allow the plunger to 'stroke through' the entire length of the barrel to help prevent scale buildup on the ID surface of the barrel. The pump is shown with either top or bottom 3-cup hold-down.

Optional equipment may include an API Bottom Lock hold-down, a Top or Bottom Simplex Mechanical hold-down, and a variety of plunger and barrel options to meet all service requirements. All pump fittings can be changed to materials such as stainless steel, NCA (Nickel-Copper Alloy) to suit challenging well conditions.

The Stroke-Thru Pump is recommended for all hard to pump wells.

Parts in these pump assemblies are made to API specifications, except for Dura specific components.

RHAC, 3 CUP HOLD-DOWN - See diagram page

Item Description	Pump Size			
	2-3/8" x 1-1/4"	2-7/8" x 1-1/2"	2-7/8" x 1-3/4"	3-1/2" x 2-1/4"
Plunger Constant	0.182	0.262	0.357	0.590
S.R. Pin Connection	3/4"	3/4"	3/4"	3/4"
Fishing Neck OD	1-1/2"	1-5/8"	1-5/8"	1-5/8"
Coupling OD	1.750"	2.250"	2.250"	2.750"
Extension Upper Box	1.5730-16 UNS	2.0870-16 UNS	2.0870-16 UNS	2.5730-16 UNS
Extension Lower Box	1.5730-16 UNS	1.8750-16 UNS	2.0870-16 UNS	2.5730-16 UNS
Barrel OD	1.625"	1.875"	2.125"	2.750"
Hold-Down No-Go OD	1.895"	2.339"	2.339"	2.839"
Seating Cup OD	1.810"	2.320"	2.320"	2.820"
Travelling Valve	1-1/4"	1-1/2"	1-3/4"	2-1/4"
Standing Valve	1-3/4"	2-1/4"	2-1/4"	2-3/4"
Gas Anchor Connection	1" - 11-1/2 LP	1-1/4" - 11-1/2 LP	1-1/4" - 11-1/2 LP	1-1/2" - 11-1/2 LP
Pitch Length of Plunger - Nominal Length of Plunger Plus 3"				

Dura Products
A DISTRIBUTION NOW COMPANY

RHAC, 3 CUP HOLD-DOWN - See diagram next page

Item	Description	# Req'd	Part Numbers			
	Travelling Assembly		2-3/8" x 1-1/4"	2-7/8" x 1-1/2"	2-7/8" x 1-3/4"	3-1/2" x 2-1/4"
A	Bushing, Valve Rod With 3/4" Sucker Rod Pin	1	0608-0110-24	0608-0120-24	0608-0120-24	0608-0130-24
B[1]	Valve Rod	1	0656-072X-XX	0656-092X-XX	0656-092X-XX	0656-112X-XX
C	Coupling, Top Plunger	1	0628-4712-20	0628-4715-21	0628-4717-20	0628-4722-21
D[2]	Plunger, Pin End, 4' Metal Sprayed	1	0629-1204-XX	0629-1404-XX	0629-1704-XX	0629-2204-XX
	Plunger, Pin End, 5' Metal Sprayed		0629-1205-XX	0629-1405-XX	0629-1705-XX	0629-2205-XX
	Plunger, Pin End, 6' Metal Sprayed		0629-1206-XX	0629-1406-XX	0629-1706-XX	0629-2206-XX
E	Bushing, Insert Cage	1	0622-1234-20	0622-1534-20	0622-1734-20	0622-2234-20
F	Gasket	1	0698-0929-00	0698-0930-00	0698-0931-00	0698-0933-00
G	Insert Cage	1	0622-1259-79	0622-1559-79	0622-1759-79	0622-2259-79
H	Shell, Insert Cage	1	0622-1273-20	0622-1573-20	0622-1773-20	0622-2273-20
I	Ball and Seat	1	0604-1211-16	0604-1514-16	0604-1716-16	0604-2220-16
J	Plug, Seat	1	0639-0512-10	0639-0515-10	0639-0517-10	0639-0522-21
	Standing Assembly					
K	Guide, Valve Rod	1	0658-1026-20	0658-2026-20	0658-2026-20	0658-3026-20
L[3] (Hold-Down)	Mandrel	1	0658-1001-10	0658-2001-10	0658-2001-10	0658-3001-10
	Seating Cup	3	2231-0110-80	2231-0114-10	2231-0114-10	2231-0906-10
	Spacer	2	0658-1004-10	0658-2004-10	0658-2004-10	0658-3004-10
	Lock Nut	1	0658-1005-10	0658-2005-10	0658-2005-10	0658-3005-10
	Bushing	1	0658-1308-10	0658-2307-20	0658-2307-20	0658-3708-10
M	Coupling, Extension (24")	1	0628-0112-24	0628-0115-24	0628-0117-24	0628-0122-24
N[4]	Barrel, Dura G-CH, Steel Chrome	1	0612-1206-XX	0612-1506-XX	0612-1706-XX	0612-2206-XX
O	Coupling, Extension (12")	1	0628-0112-12	0628-0115-12	0628-0117-12	0628-0122-12
P	Connector, Insert Cage	1	0622-1737-20	0622-2237-20	0622-2237-20	0622-2737-20
Q	Gasket	1	0698-0931-00	0698-0933-00	0698-0933-00	0698-1041-00
R	Insert Cage	1	0622-1759-79	0622-2259-79	0622-2259-79	0622-2759-79
S	Shell, Insert Cage	1	0622-1773-20	0622-2273-20	0622-2273-20	0622-2773-20
T	Ball and Seat	1	0604-1716-16	0604-2220-16	0604-2220-16	0604-2724-16
U	Bushing, Seat, Barrel, Cage	1	0608-0310-10	0608-0320-10	0608-0320-10	0608-0330-10
	Seating Nipple Recommended For 8 RD EUE Tubing	1	0636-1210-12	0636-1220-12	0636-1220-12	0636-1230-12

1 - X's represent valve rod length in inches; this code is for unthreaded valve rod. Contact plant for proper length.
2 - XX represents plunger fit. Example 0629-1203-47 is a -.003" fit.
3 - Mechanical hold-downs available as direct replacements for the 3 cup hold-down assembly.
4 - XX represents the barrel length in feet. Contact plant for barrel length availability.

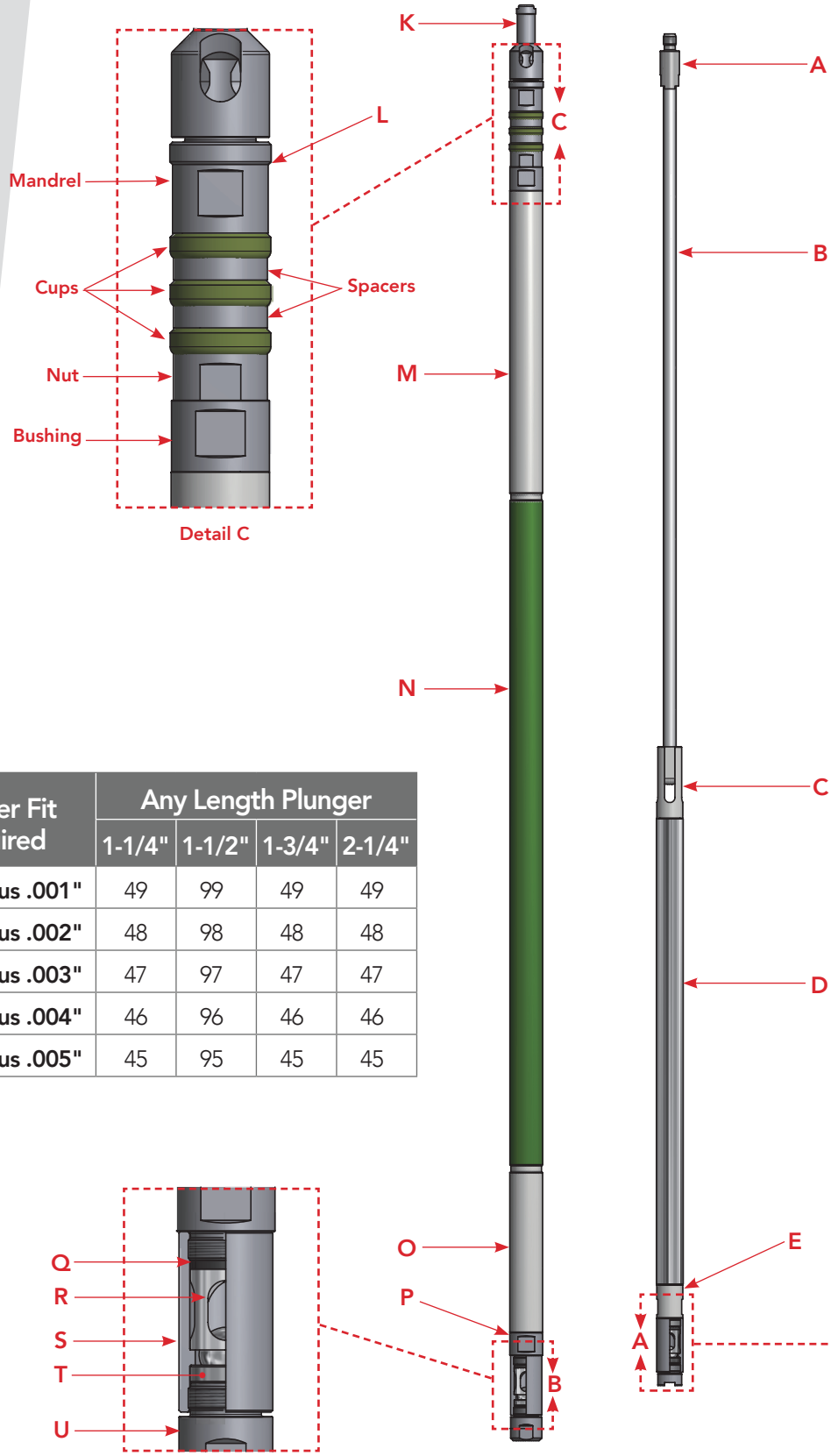

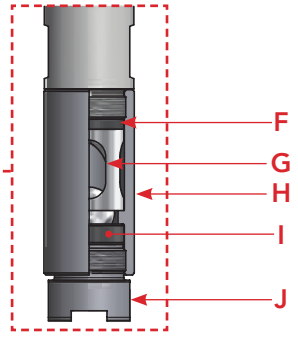

Plunger Fit Required	Any Length Plunger			
	1-1/4"	1-1/2"	1-3/4"	2-1/4"
Base Minus .001"	49	99	49	49
Base Minus .002"	48	98	48	48
Base Minus .003"	47	97	47	47
Base Minus .004"	46	96	46	46
Base Minus .005"	45	95	45	45

Rod Insert Pump, RHAC, 3 Cup Hold-Down

RHBC, 3 CUP HOLD-DOWN - See diagram page

Item Description	Pump Size			
	2-3/8" x 1-1/4"	2-7/8" x 1-1/2"	2-7/8" x 1-3/4"	3-1/2" x 2-1/4"
Plunger Constant	0.182	0.262	0.357	0.590
S.R. Pin Connection	3/4"	3/4"	3/4"	3/4"
Fishing Neck OD	1-1/2"	1-5/8"	1-5/8"	1-5/8"
Coupling OD	1.750"	2.250"	2.250"	2.750"
Extension Upper Box	1.5730-16 UNS	2.0870-16 UNS	2.0870-16 UNS	2.5730-16 UNS
Extension Lower Box	1.5730-16 UNS	1.8750-16 UNS	2.0870-16 UNS	2.5730-16 UNS
Barrel OD	1.625"	1.875"	2.125"	2.750"
Hold-Down No-Go OD	1.895"	2.339"	2.339"	2.839"
Seating Cup OD	1.810"	2.320"	2.320"	2.820"
Travelling Valve	1-1/4"	1-1/2"	1-3/4"	2-1/4"
Standing Valve	1-3/4"	2-1/4"	2-1/4"	2-3/4"
Gas Anchor Connection	1" - 11-1/2 LP	1-1/4" - 11-1/2 LP	1-1/4" - 11-1/2 LP	1-1/2" - 11-1/2 LP
Pitch Length of Plunger - Nominal Length of Plunger Plus 3"				

Dura Products
A DISTRIBUTIONNOW COMPANY

RHBC, 3 CUP HOLD-DOWN - See diagram next page

Item	Description	# Req'd	Part Numbers			
	Travelling Assembly		2-3/8" x 1-1/4"	2-7/8" x 1-1/2"	2-7/8" x 1-3/4"	3-1/2" x 2-1/4"
A	Bushing, Valve Rod With 3/4" Sucker Rod Pin	1	0608-0110-24	0608-0120-24	0608-0120-24	0608-0130-24
B[1]	Valve Rod	1	0656-072X-XX	0656-092X-XX	0656-092X-XX	0656-112X-XX
C	Coupling, Top Plunger	1	0628-4712-20	0628-4715-21	0628-4717-20	0628-4722-21
D[2]	Plunger, Pin End, 4' Metal Sprayed	1	0629-1204-XX	0629-1404-XX	0629-1704-XX	0629-2204-XX
	Plunger, Pin End, 5' Metal Sprayed		0629-1205-XX	0629-1405-XX	0629-1705-XX	0629-2205-XX
	Plunger, Pin End, 6' Metal Sprayed		0629-1206-XX	0629-1406-XX	0629-1706-XX	0629-2206-XX
E	Bushing, Insert Cage	1	0622-1234-20	0622-1534-20	0622-1734-20	0622-2234-20
F	Gasket	1	0698-0929-00	0698-0930-00	0698-0931-00	0698-0933-00
G	Insert Cage	1	0622-1259-79	0622-1559-79	0622-1759-79	0622-2259-79
H	Shell, Insert Cage	1	0622-1273-20	0622-1573-20	0622-1773-20	0622-2273-20
I	Ball and Seat	1	0604-1211-16	0604-1514-16	0604-1716-16	0604-2220-16
J	Plug, Seat	1	0639-0512-10	0639-0515-10	0639-0517-10	0639-0522-11
	Standing Assembly					
K	Guide, Valve Rod	1	0658-1026-20	0658-2026-20	0658-2026-20	0658-3026-20
L	Connector, Guide Type	1	0626-1501-12	0626-2001-12	0626-2001-12	0626-2501-32
M	Coupling, Extension (24")	1	0628-0112-24	0628-0115-24	0628-0117-24	0628-0122-24
N[3]	Barrel, Dura G-CH, Steel Chrome	1	0612-1206-XX	0612-1506-XX	0612-1706-XX	0612-2206-XX
O	Coupling, Extension (12")	1	0628-0112-12	0628-0115-12	0628-0117-12	0628-0122-12
P	Connector, Insert Cage	1	0622-1737-20	0622-2237-20	0622-2237-20	0622-2737-20
Q	Gasket	1	0698-0931-00	0698-0933-00	0698-0933-00	0698-1041-00
R	Insert Cage	1	0622-1759-79	0622-2259-79	0622-2259-79	0622-2759-79
S	Shell, Insert Cage	1	0622-1773-20	0622-2273-20	0622-2273-20	0622-2773-20
T	Ball and Seat	1	0604-1716-16	0604-2220-16	0604-2220-16	0604-2724-16
U[4] (Hold-Down)	Mandrel	1	0658-1001-10	0658-2001-10	0658-2001-10	0658-3001-10
	Seating Cup	3	2231-0110-80	2231-0114-10	2231-0114-10	2231-0906-10
	Spacer	2	0658-1004-10	0658-2004-10	0658-2004-10	0658-3004-10
	Lock Nut	1	0658-1005-10	0658-2005-10	0658-2005-10	0658-3005-10
	Tappered Coupling	1	0658-1006-10	0658-2006-10	0658-2006-10	0658-3006-10
	Seating Nipple Recommended For 8 RD EUE Tubing	1	0636-1210-12	0636-1220-12	0636-1220-12	0636-1230-12

1 - X's represent valve rod length in inches; this code is for unthreaded valve rod. Contact plant for proper length.
2 - XX represents plunger fit. Example 0629-1203-47 is a -.003" fit.
3 - XX represents the barrel length in feet. Contact plant for barrel length availability.
4 - Mechanical hold-downs available as direct replacements for the 3 cup hold-down assembly.

Plunger Fit Required	Base Size			
	1-1/4"	1-1/2"	1-3/4"	2-1/4"
Base Minus .001"	49	99	49	49
Base Minus .002"	48	98	48	48
Base Minus .003"	47	97	47	47
Base Minus .004"	46	96	46	46
Base Minus .005"	45	95	45	45

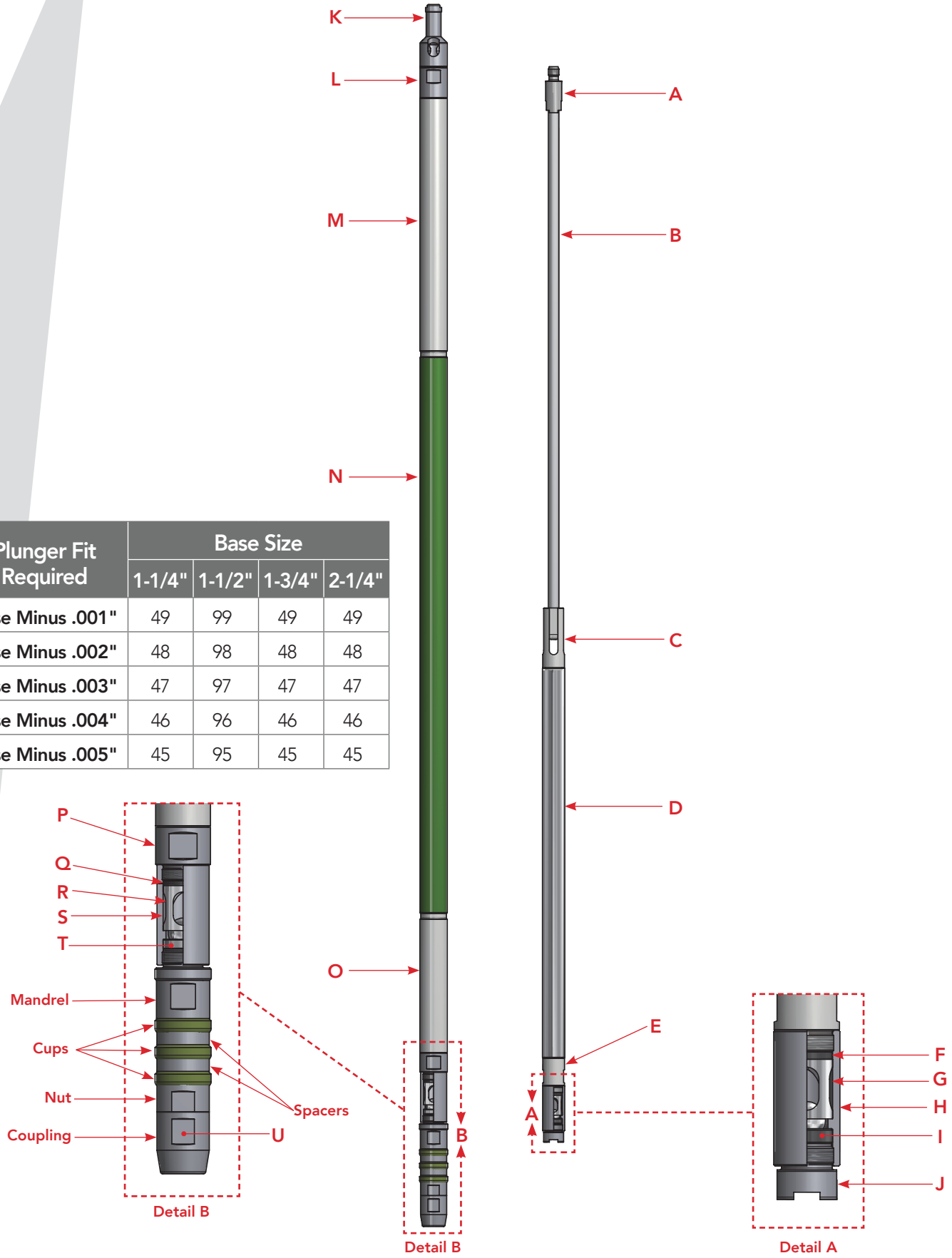

Rod Insert Pump, RHBC, 3 Cup Hold-down

These pumps are equipped with Friction-Seal hold downs, Ultra Plungers, and Insert Guided cages. They utilize either API TH barrels or large bore RX barrels (3-1/4" & 3-3/4").

TOP HOLD-DOWN - See diagram next page

Item	Description	# Req'd	Part Numbers			
	Travelling Assembly		4-1/2" x 2-1/4"	4-1/2" x 2-3/4"	4-1/2" x 3-1/4"	5-1/2" x 3-3/4"
A	Bushing, Valve Rod With 7/8" Sucker Rod Pin	1	0608-0130-25	0608-0130-25	0608-0130-25	0608-0130-25
B[1]	Valve Rod	1	0656-112X-XX	0656-112X-XX	0656-112X-XX	0656-112X-XX
C	Coupling, Top Plunger	1	0628-7322-20	0628-7327-20	0628-7332-20	0628-7337-20
D[2]	Plunger, Box-End, Carbide	1	0607-220X-XX	0607-270X-XX	0607-320X-XX	0607-370X-XX
E	Connector, Insert Cage	1	0622-2235-20	0622-2735-20	0622-3235-20	0626-3706-02
F	Gasket	1	0698-0933-00	0698-1041-00	0698-1041-06	0698-1041-07
G	Insert Cage	1	0622-2259-79	0622-2759-79	0622-3259-79	0622-3759-79
H	Shell, Insert Cage	1	0622-2273-20	0622-2773-20	0622-3273-20	0622-3766-20
I	Ball and Seat	1	0604-2220-16	0604-2724-16	0604-3230-16	0604-3732-16
J	Plug, Seat	1	0639-0522-11	0639-0525-10	0638-3298-01	0638-3798-01
	Standing Assembly					
K	Guide, Valve Rod		0658-4026-20	0658-4026-20	0658-4026-20	0658-5526-20
L	Mandrel	1	0658-4094-10	0658-4094-10	0658-4094-10	0658-5594-20
	Friction-Seal Ring	2	0658-4083-30	0658-4083-30	0658-4083-30	0658-5583-30
	Spacer Ring	1	0658-4055-10	0658-4055-10	0658-4055-10	0658-5555-20
	Lock Nut	1	0658-4093-10	0658-4093-10	0658-4093-10	0658-5593-20
	Barrel Bushing / Connector	1	0658-4070-20	0658-4071-20	0658-4067-10	0658-5567-20
M[3]	Barrel, Dura G-CH, Steel Chrome TH (2-1/4, 2-3/4) RX (3-1/4)	1	0612-2204-XX	0612-2704-XX	0612-3254-XX	0612-3759-XX
N	Barrel Bushing / Connector	1	0622-3237-22	0622-3737-27	0626-3227-20	0622-3737-20
O	Gasket	1	0698-1041-06	0698-1041-07	0698-1041-07	0698-1041-07
P	Insert Cage	1	0622-3259-79	0622-3759-79	0622-3759-79	0622-3759-79
Q	Shell, Insert Cage	1	0622-3273-20	0622-3766-20	0622-3766-20	0622-3766-20
R	Ball & Seat	1	0604-3230-16	0604-3732-16	0604-3732-16	0604-3732-16
S	Lock Nut	1	0638-2799-02	0638-3799-02	0638-3799-02	0638-3799-02
T	Connector / Plug	1	0626-2799-22	0626-3799-41	0626-3799-41	0626-3799-41
	Friction-Seal Pump Seating Nipple	1	0636-5240-12	0636-5240-12	0636-5240-12	0636-6055-20

1 - X's represent valve rod length in inches; this code is for unthreaded valve rod. Contact plant for proper length.
2 - XX represents plunger fit. Example 0629-1203-47 is a -.003" fit.
3 - XX represents the barrel length in feet. Contact plant for barrel length availability.

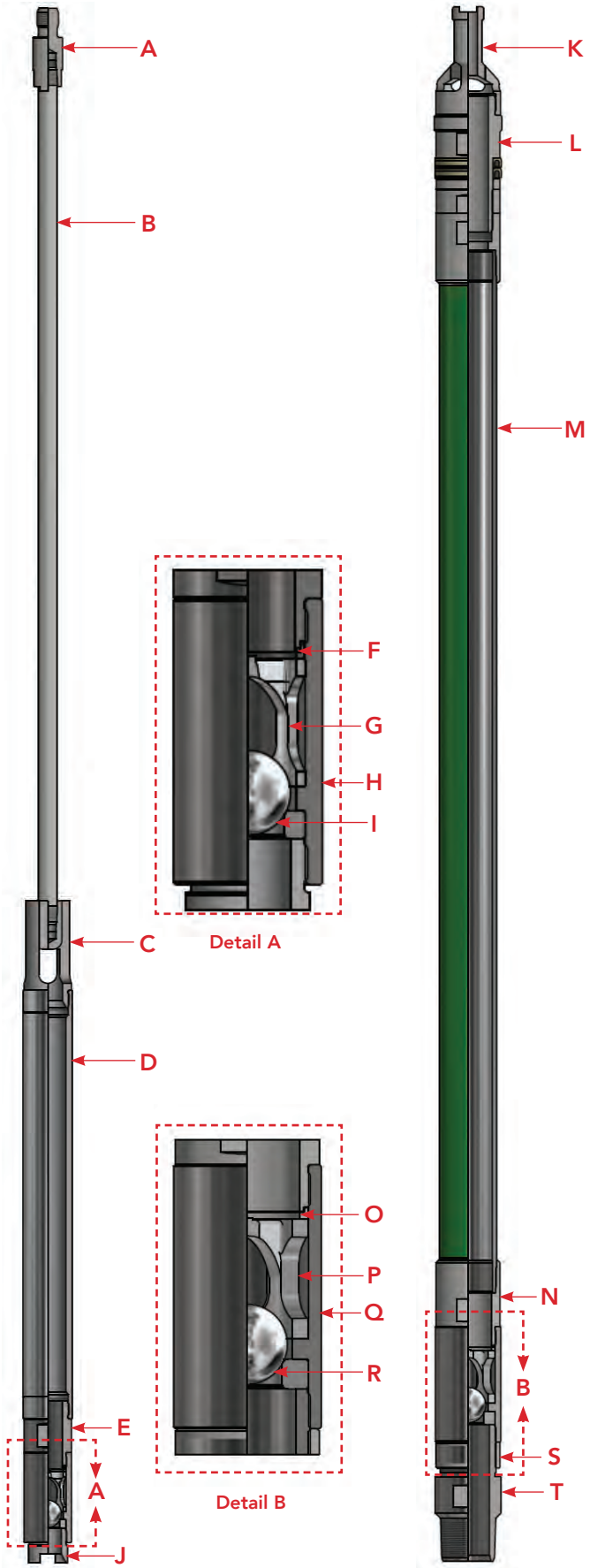

TH Barrel Configuration

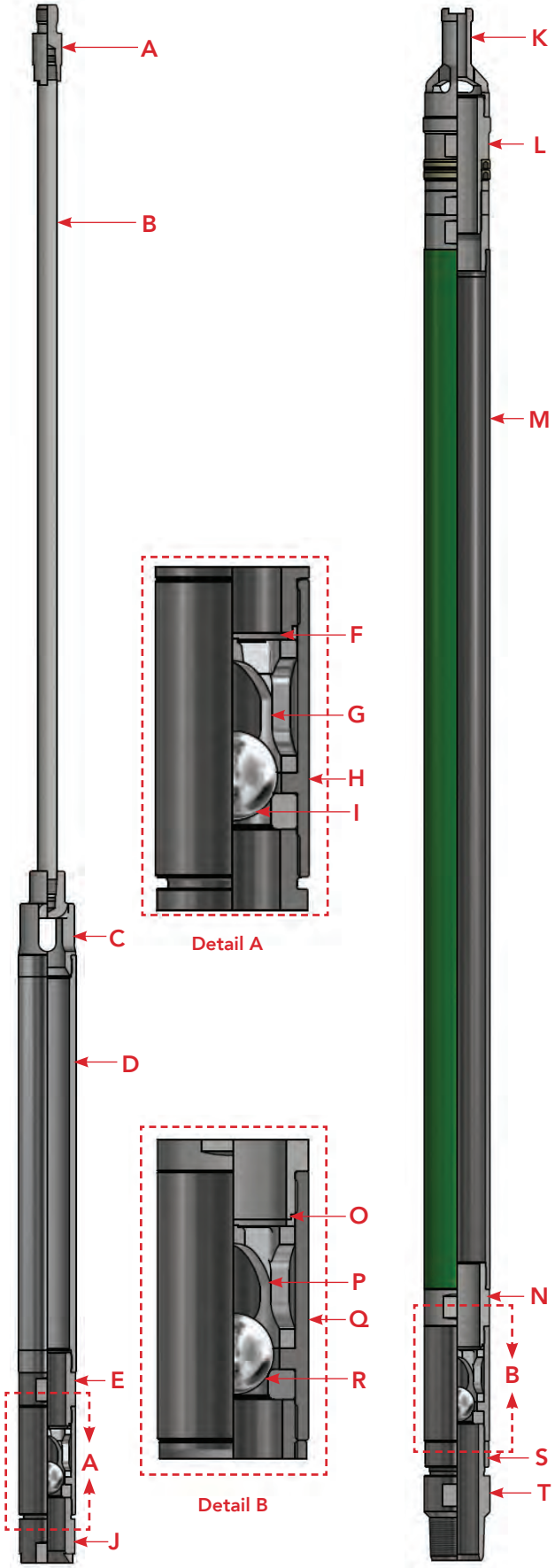

RX Barrel Configuration

These pumps are equipped with Friction-Seal hold downs, Ultra Plungers, and Insert Guided cages. They utilize either API TH barrels or large bore RX barrels (3-1/4" & 3-3/4").

BOTTOM HOLD-DOWN - See diagram next page

Item	Description	# Req'd	Part Numbers	
	Travelling Assembly		4-1/2" x 2-3/4"	4-1/2" x 3-1/4"
A	Bushing, Valve Rod With 7/8" Sucker Rod Pin	1	0608-0130-25	0608-0130-25
B[1]	Valve Rod	1	0656-112X-XX	0656-112X-XX
C	Coupling, Top Plunger	1	0628-7327-20	0628-7332-20
D[2]	Plunger, Box-End, Carbide	1	0607-270X-XX	0607-320X-XX
E	Connector, Insert Cage	1	0622-2735-20	0622-3235-20
F	Gasket	1	0698-1041-00	0698-1041-06
G	Insert Cage	1	0622-2759-79	0622-3259-79
H	Shell, Insert Cage	1	0622-2773-20	0622-3273-20
I	Ball & Seat	1	0604-2724-16	0604-3230-16
J	Plug, Seat	1	0639-0525-10	0638-3298-01
	Standing Assembly			
K	Guide, Valve Rod		0658-4026-20	0658-4026-20
L	Barrel Bushing / Connector	1	0626-4503-27	0626-3706-02
M[3]	Barrel, Dura G-CH, Steel Chrome TH (2-3/4) RX (3-1/4)	1	0612-2704-XX	0612-3254-XX
N	Barrel Bushing / Connector	1	0622-3737-27	0626-3227-20
O	Gasket	1	0698-1041-07	0698-1041-07
P	Insert Cage	1	0622-3759-79	0622-3759-79
Q	Shell, Insert Cage	1	0622-3766-20	0622-3766-20
R	Ball & Seat	1	0604-3732-16	0604-3732-16
S	Mandrel	1	0658-4094-10	0658-4094-10
	Friction-Seal Ring	2	0658-4083-30	0658-4083-30
	Spacer Ring	1	0658-4055-10	0658-4055-10
	Lock Nut	1	0658-4093-10	0658-4093-10
	Tapered Coupling	1	0658-4006-11	0658-4006-11
	Friction-Seal Pump Seating Nipple	1	0636-5240-12	0636-5240-12

1 - X's represent valve rod length in inches; this code is for unthreaded valve rod. Contact plant for proper length.
2 - XX represents plunger fit. Example 0607-2703-47 is a -.003" fit, the first X is the nominal length in feet.
3 - XX represents the barrel length in feet. Contact plant for barrel length availability.

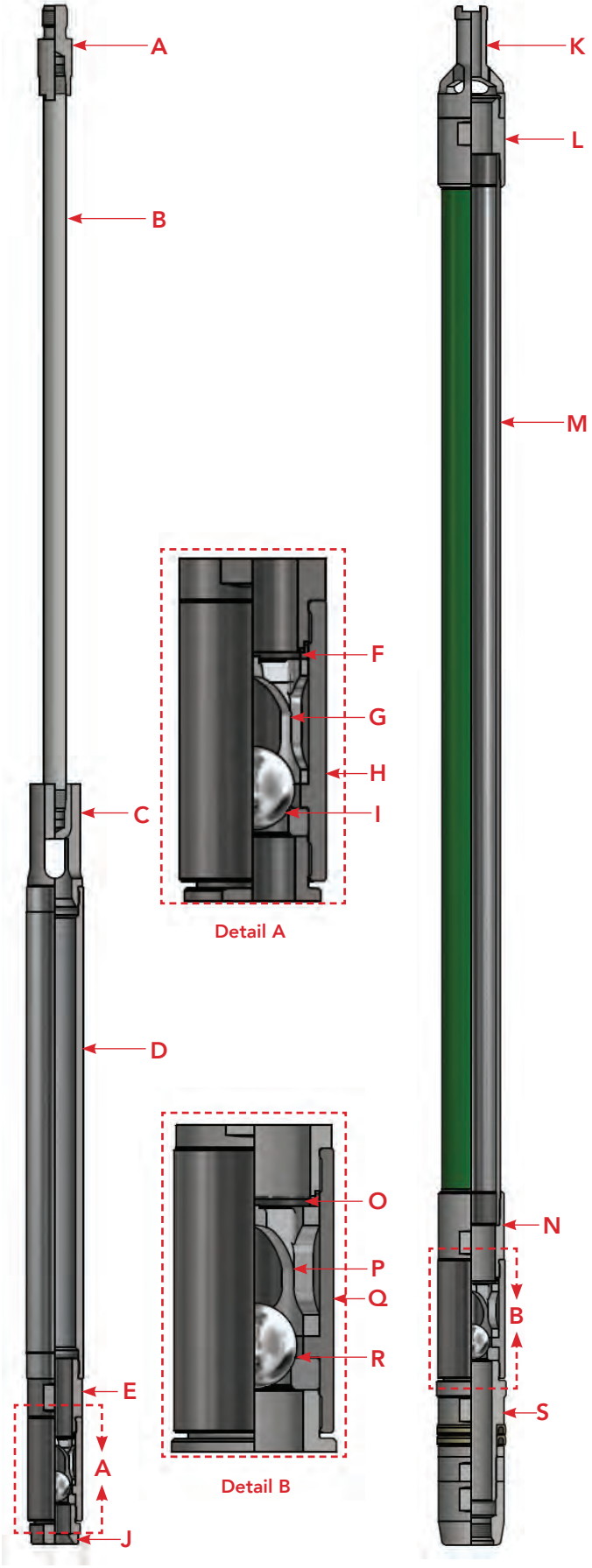

TH Barrel Configuration

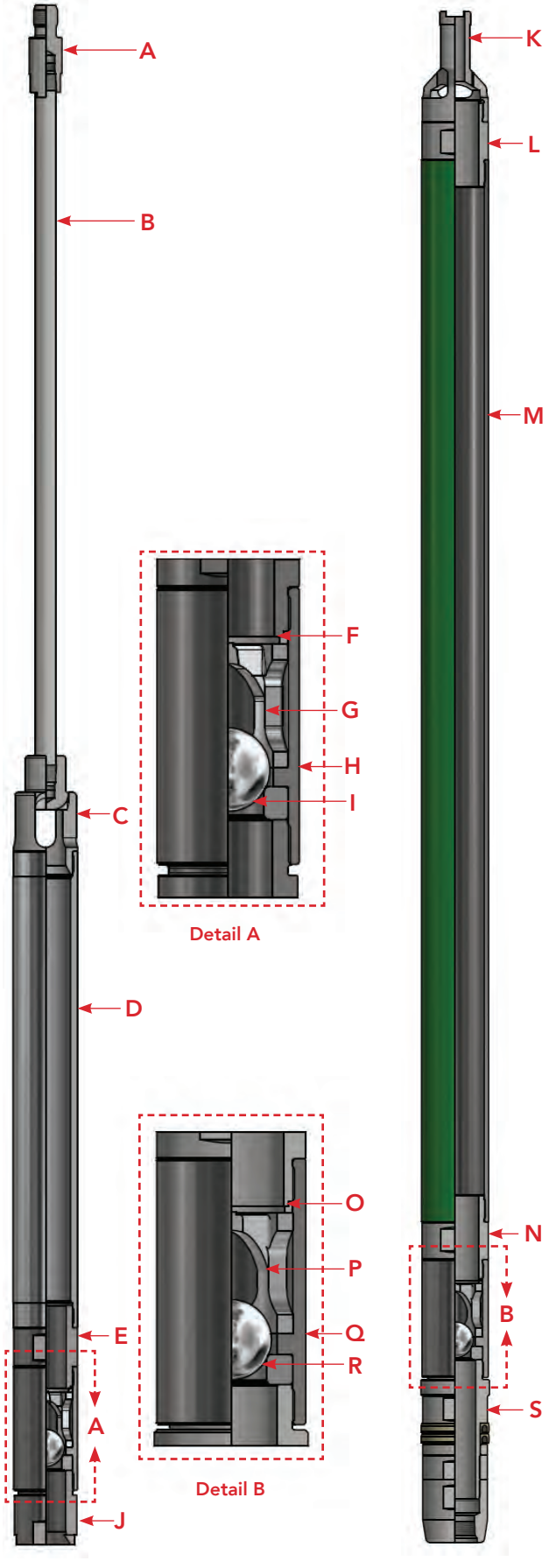

RX Barrel Configuration

TUBING PUMPS

Offered in 2-3/8" x 1-3/4", 2-7/8" x 2-1/4", 3-1/2" x 2-3/4", and 4-1/2" x 3-3/4" in all popular lengths.

The Tubing Pump is meant to handle low gravity viscous fluids, high water-cut wells, and wells with light fluid. Its heavy duty construction makes it suited for those hard to pump wells and wells that can produce large volumes. Due to the puller-assembly spacing the travelling and standing valves farther apart, there is a larger unswept area that lessens the compression ratio of the pump, which may be a concern in gassy conditions.

This pump incorporates a heavy wall steel barrel with a chrome plated ID. The ID hardness, combined with its precision mirror like finish, gives good wearing characteristics and minimum friction.

Standard equipment includes Dura-G-CH steel chrome plated barrels, spray-metal plungers, alloy steel fittings and insert guided cages, titanium carbide ball & tungsten carbide seat valves, retrievable standing valve (2 cup or bottom lock mechanical hold-down) and tap-type puller. Optional equipment includes a variety of grades of balls & seats, barrels, plungers, cages, and fittings as listed in the "Pump Components" section.

Dura Products
A DISTRIBUTION NOW COMPANY

20-175 THC & THM - See diagram page

Item Description	Pump Size
	2-3/8" x 1-3/4"
Bore Factor	0.357
S.R. Pin Connection	3/4"
Coupling - O.D.	3.063"
Thread	2.375" 8RD EUE
Seating Cup O.D. For Nipple I.D.	1-3/4" - 10 (1.740")
Travelling Valve	1-3/4"
Standing Valve	1-3/4"
Gas Anchor Connection	1-1/2" -11-1/2 V LP

Plunger Fit Required	Any Length Plunger
	1-3/4"
Base Minus .001"	49
Base Minus .002"	48
Base Minus .003"	47
Base Minus .004"	46
Base Minus .005"	45

Plunger		Part Numbers
Base O.D.	Length	Standard Box End SM
1-3/4"	3'	0649-1703-XX
	4'	0649-1704-XX
	5'	0649-1705-XX
	6'	0649-1706-XX

Dura Products
A DISTRIBUTION NOW COMPANY

20-175 THC & THM - See diagram next page

Item	Description	# Req'd	Equipped With API 2-CUP Standing Valve	Equipped With API Mechanical Lock Standing Valve
	Standing Assembly			
A	Coupling, Barrel, EUE	2	0628-1810-25	0628-1810-25
B[1]	Barrel, Dura G-CH, Steel Chrome	1	0612-1704-XX	0612-1704-XX
C	Nipple, 2-Cup Seating EUE	1	0636-1410-15	—
D	Nipple, Mechanical Lock, EUE	1	—	0636-0110-15
	Travelling Assembly			
E	Connector, w/ 3/4" S.R. Pin	1	0626-1769-24	0626-1769-24
F[2]	Plunger, Box-End, Metal Sprayed	1	0649-170X-XX	0649-170X-XX
G	Connector, Insert Cage	1	0622-1735-20	0622-1735-20
H	Gasket	2	0698-0931-00	0698-0931-00
I	Insert Cage	2	0622-1759-79	0622-1759-79
J	Shell	2	0622-1773-20	0622-1773-20
K	Ball and Seat	2	0604-1716-16	0604-1716-16
L	Puller, Body	1	0654-0217-51	0654-0217-51
M	Puller, Housing	1	0654-0300-01	0654-0300-01
N	Puller, Monel Spring	1	0654-0400-06	0654-0400-06
O	Puller, Key Pin	1	0654-0500-01	0654-0500-01
P	Puller, Tap	1	0654-0600-01	0654-0600-01
	Standing Valve Assembly			
Q	Cage, Top Open, Insert Cage	1	0620-1777-20	0620-1777-20
R	Mandrel, API 2 Cup	1	0658-1756-10	—
S	Cup, 1-3/4"-10, Composite	2	2231-0168-30	—
T	Seating Cup Ring, API 2 Cup	1	0658-1004-10	—
U	Lock Nut, API 2 Cup	1	0658-1005-10	—
V	Tapered Coupling, API 2 Cup	1	0658-1006-10	—
W	Bushing, API Mechanical Lock	1	—	0658-1013-20
X	Brass Seat, API Mechanical Lock	1	—	0658-1014-40
Y	Mandrel, API Mechanical Lock	1	—	0658-1015-20

1 - XX Represents barrel length in feet. Example: 0612-1704-20 is a 20' barrel.
2 - X-XX Represents plunger length in feet, then plunger fit. Example: 0649-1704-47 is a 4' plunger with a -.003" fit.

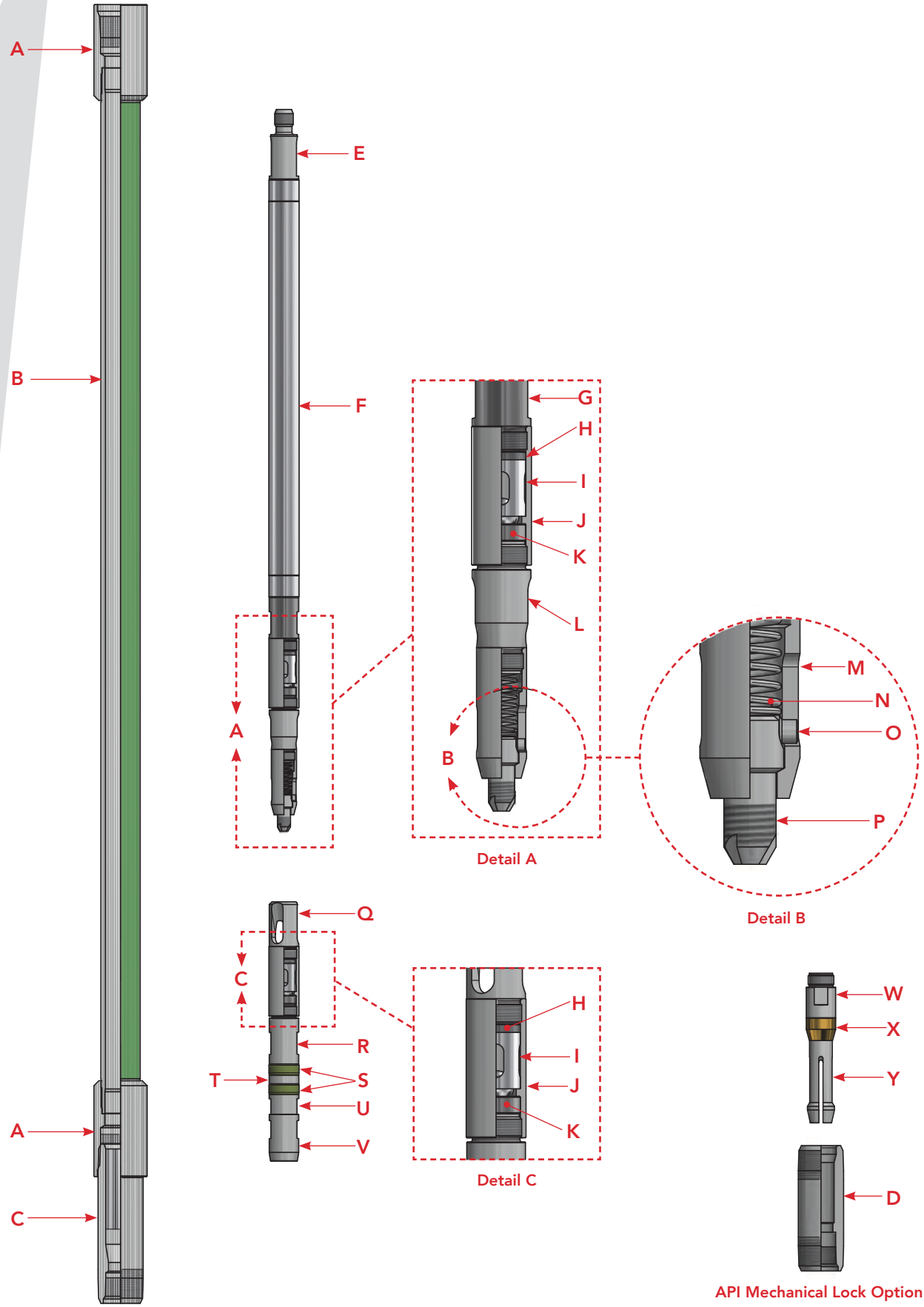

Tubing Pump, 20-175 THC & THM

25-225 THC & THM - See diagram page

Item Description	Pump Size
	2-7/8" x 2-1/4"
Bore Factor	0.590
S.R. Pin Connection	3/4"
Coupling - O.D.	3.668"
Thread	2.875" 8RD EUE
Seating Cup O.D. For Nipple I.D.	2-1/4" - 10 (2.240")
Travelling Valve	2-1/4"
Standing Valve	2-1/4"
Gas Anchor Connection	2" -11-1/2 V LP

Plunger Fit Required	Any Length Plunger
	2-1/4"
Base Minus .001"	49
Base Minus .002"	48
Base Minus .003"	47
Base Minus .004"	46
Base Minus .005"	45

Plunger		Part Numbers
Base O.D.	Length	Standard Box End SM
2-1/4"	2'	0649-2202-XX
	3'	0649-2203-XX
	4'	0649-2204-XX
	5'	0649-2205-XX

25-225 THC & THM - See diagram next page

Item	Description	# Req'd	Equipped With API 2-CUP Standing Valve	Equipped With API Mechanical Lock Standing Valve
	Standing Assembly			
A	Coupling, Barrel, EUE	2	0628-1820-25	0628-1820-25
B[1]	Barrel, Dura G-CH, Steel Chrome	1	0612-2204-XX	0612-2204-XX
C	Nipple, 2-Cup Seating EUE	1	0636-1420-15	—
D	Nipple, Mechanical Lock, EUE	1	—	0636-2051-15
	Travelling Assembly			
E	Connector, w/ 3/4" S.R. Pin	1	0626-2269-24	0626-2269-24
F[2]	Plunger, Box-End, Metal Sprayed	1	0649-220X-XX	0649-220X-XX
G	Connector, Insert Cage	1	0622-2234-21	0622-2234-21
H	Gasket	2	0698-0933-00	0698-0933-00
I	Insert Cage	2	0622-2259-79	0622-2259-79
J	Shell	2	0622-2273-20	0622-2273-20
K	Ball and Seat	2	0604-2220-16	0604-2220-16
L	Puller, Body	1	0654-0222-51	0654-0222-51
M	Puller, Housing	1	0654-0300-01	0654-0300-01
N	Puller, Monel Spring	1	0654-0400-06	0654-0400-06
O	Puller, Key Pin	1	0654-0500-01	0654-0500-01
P	Puller, Tap	1	0654-0600-01	0654-0600-01
	Standing Valve Assembly			
Q	Cage, Top Open, Insert Cage	1	0620-2277-20	0620-2277-20
R	Mandrel, API 2 Cup	1	0658-2256-10	—
S	Cup, 2-1/4"-10, Composite	2	2231-0168-60	—
T	Seating Cup Ring, API 2 Cup	1	0658-2004-10	—
U	Lock Nut, API 2 Cup	1	0658-2005-10	—
V	Tapered Coupling, API 2 Cup	1	0658-2006-10	—
W	Bushing, API Mechanical Lock	1	—	0658-2013-20
X	Brass Seat, API Mechanical Lock	1	—	0658-2014-40
Y	Mandrel, API Mechanical Lock	1	—	0658-2015-21

1 - XX Represents barrel length in feet. Example: 0612-2204-20 is a 20' barrel.
2 - X-XX Represents plunger length in feet, then plunger fit. Example: 0649-2204-47 is a 4' plunger with a -.003" fit.

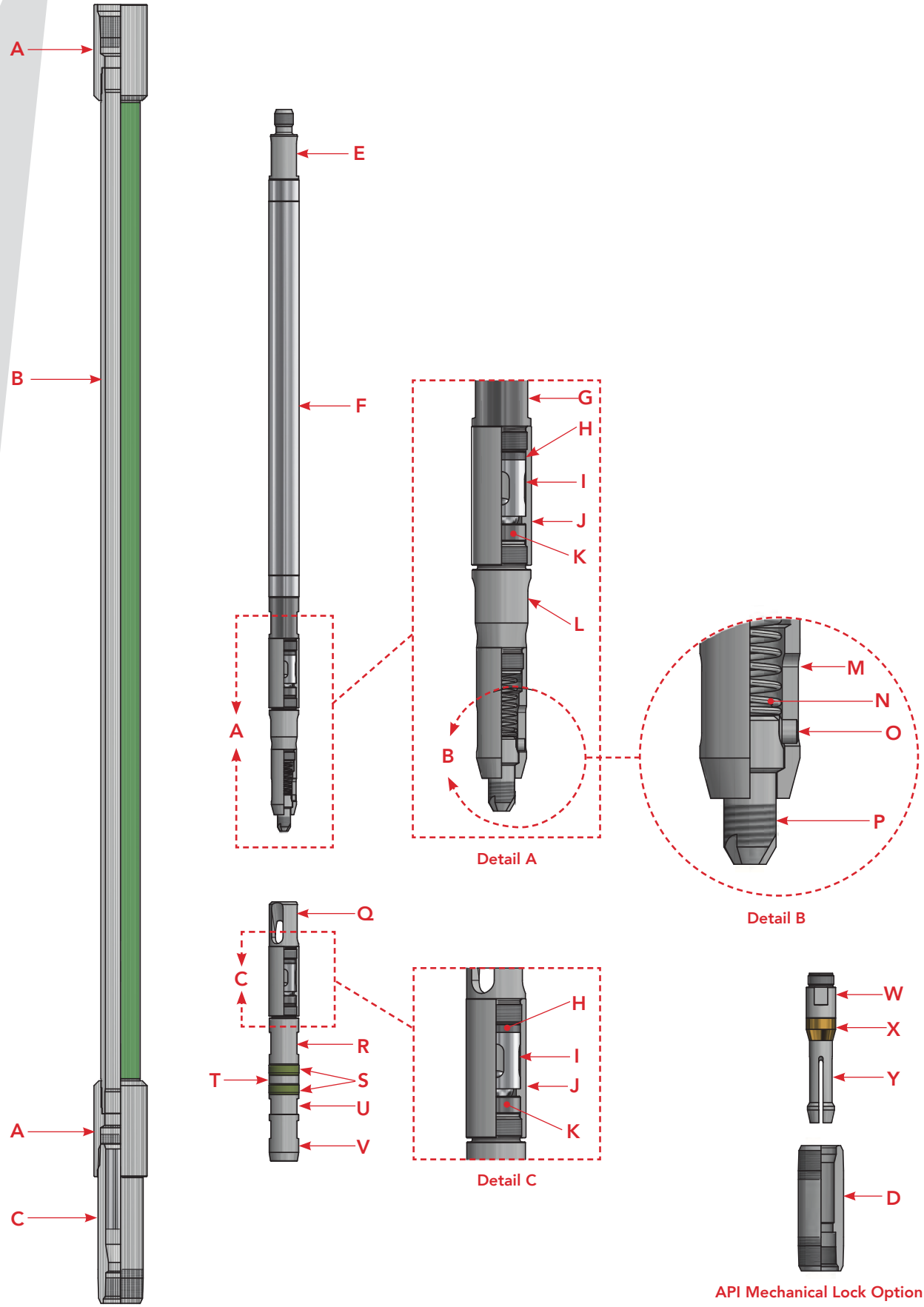

Tubing Pump, 25-225 THC & THM

30-275 THC & THM - See diagram page

Item Description	Pump Size
	3-1/2" X 2-3/4"
Bore Factor	0.881
S.R. Pin Connection	7/8"
Coupling - O.D.	4.500"
Thread	3.500" 8 RD EUE
Seating Cup O.D. For Nipple I.D.	2-3/4" - 10 (2.740")
Travelling Valve	2-3/4" (2-1/2" API)*
Standing Valve	2-3/4" (2-1/2"API)*
Gas Anchor Connection	2-1/2" -11-1/2 V LP

* API refers to this valve as 2-1/2", in this catalogue we refer to as 2-3/4".

Plunger Fit Required	Any Length Plunger
	2-3/4"
Base Minus .001"	49
Base Minus .002"	48
Base Minus .003"	47
Base Minus .004"	46
Base Minus .005"	45

Plunger		Part Numbers
Base O.D.	Length	Standard Box End SM
2-3/4"	3'	0649-2703-XX
	4'	0649-2704-XX
	5'	0649-2705-XX
	6'	0649-2706-XX

Dura Products
A DISTRIBUTION NOW COMPANY

30-275 THC & THM - See diagram next page

Item	Description	# Req'd	Equipped With API 2-CUP Standing Valve	Equipped With API Mechanical Lock Standing Valve
	Standing Assembly			
A	Coupling, Barrel, EUE	2	0628-1830-25	0628-1830-25
B[1]	Barrel, Dura G-CH, Steel Chrome	1	0612-2704-XX	0612-2704-XX
C	Nipple, 2-Cup Seating EUE	1	0636-1430-15	—
D	Nipple, Mechanical Lock, EUE	1	—	0636-0130-15
	Travelling Assembly			
E	Connector, w/ 7/8" S.R. Pin	1	0626-2769-25	0626-2769-25
F[2]	Plunger, Box-End, Metal Sprayed	1	0649-270X-XX	0649-270X-XX
G	Connector, Insert Cage	1	0622-2735-20	0622-2735-20
H	Gasket	2	0698-1041-00	0698-1041-00
I	Insert Cage	2	0622-2759-79	0622-2759-79
J	Shell	2	0622-2773-20	0622-2773-20
K	Ball and Seat	2	0604-2724-16	0604-2724-16
L	Puller, Body	1	0654-0227-51	0654-0227-51
M	Puller, Housing	1	0654-0300-01	0654-0300-01
N	Puller, Monel Spring	1	0654-0400-06	0654-0400-06
O	Puller, Key Pin	1	0654-0500-01	0654-0500-01
P	Puller, Tap	1	0654-0600-01	0654-0600-01
	Standing Valve Assembly			
Q	Cage, Top Open, Insert Cage	1	0620-2777-20	0620-2777-20
R	Mandrel, API 2 Cup	1	0658-2756-10	—
S	Cup, 2-3/4"-10, Composite	2	2231-0785-90	—
T	Seating Cup Ring, API 2 Cup	1	0658-3004-10	—
U	Lock Nut, API 2 Cup	1	0658-3005-10	—
V	Tapered Coupling, API 2 Cup	1	0658-3006-10	—
W	Bushing, API Mechanical Lock	1	—	0658-3013-20
X	Brass Seat, API Mechanical Lock	1	—	0658-3014-40
Y	Mandrel, API Mechanical Lock	1	—	0658-3015-20

1 - XX Represents barrel length in feet. Example: 0612-2204-20 is a 20' barrel.
2 - X-XX Represents plunger length in feet, then plunger fit. Example: 0649-2204-47 is a 4' plunger with a -.003" fit.

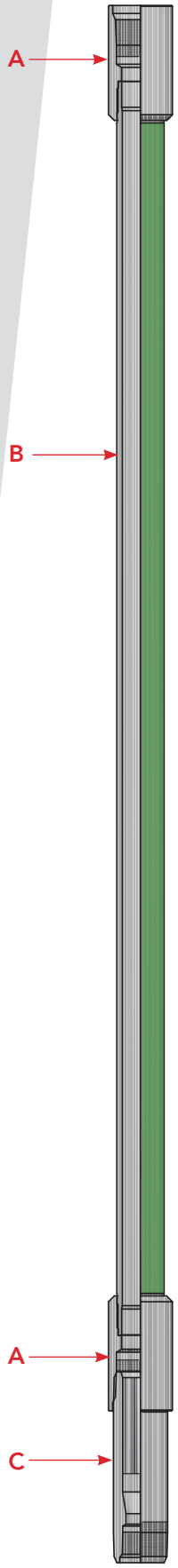

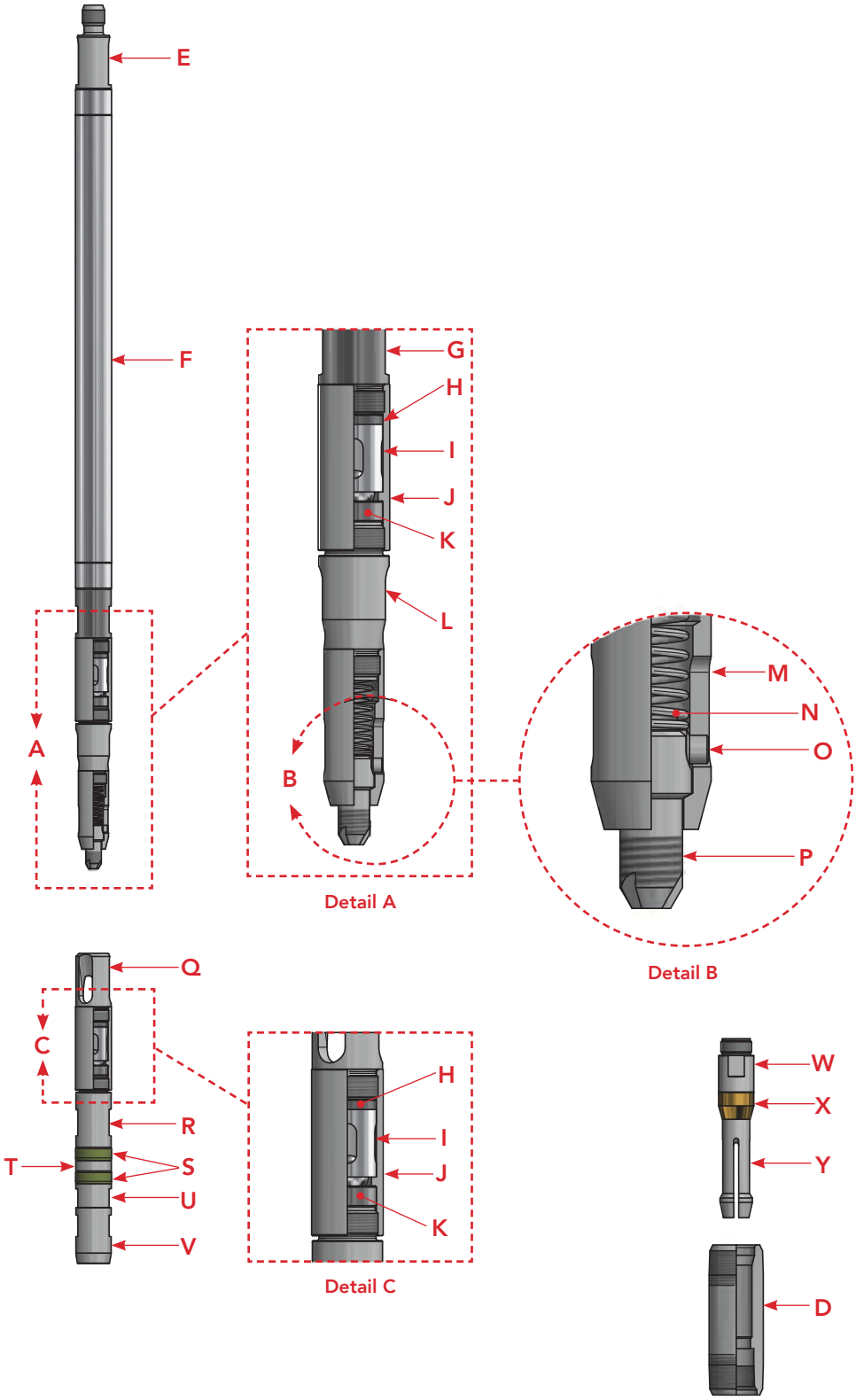

Tubing Pump, 30-275 THC & THM

40-375 THM - See diagram page

Item Description	Pump Size
	4-1/2" X 3-3/4"
Bore Factor	1.639
S.R. Pin Connection	7/8"
Coupling - O.D.	5.563"
Thread	4.500" 8 RD EUE
Travelling Valve	3-3/4"
Standing Valve	3-3/4"
Gas Anchor Connection	3" - 8V LP

Plunger Fit Required	Any Length Plunger
	3-3/4"
Base Minus .001"	49
Base Minus .002"	48
Base Minus .003"	47
Base Minus .004"	46
Base Minus .005"	45

Plunger		Part Numbers
Base O.D.	Length	Standard Box End SM
3-3/4"	3'	0649-3703-XX
	4'	0649-3704-XX
	5'	0649-3705-XX
	6'	0649-3706-XX

Dura Products
A DISTRIBUTION NOW COMPANY

40-375 THM - See diagram next page

Item	Description	# Req'd	Part Numbers
	Standing Assembly		
A	Coupling, Barrel, EUE	2	0628-1845-29
B[1]	Barrel, Dura G-CH, Steel Chrome	1	0612-3704-XX
C	Nipple, 2-Cup Seating EUE	1	0636-0140-15
	Travelling Assembly		
D	Connector, w/ 7/8" S.R. Pin	1	0626-3769-25
E[2]	Plunger, Box-End, Metal Sprayed	1	0649-370X-XX
F	Connector, Insert Cage	1	0626-3706-02
G	Gasket	2	0698-1041-07
H	Insert	2	0622-3759-79
I	Shell	2	0622-3766-20
J	Ball & Seat	2	0604-3732-16
K	Puller, Body	1	0654-0237-71
L	Puller, Housing	1	0654-0300-11
M	Puller, Monel Spring	1	0654-0400-06
N	Puller, Key Pin	1	0654-0500-01
O	Puller, Tap	1	0654-0600-01
	Standing Valve Assembly		
P	Bushing, Insert Cage	1	0620-3777-20
Q	Bushing, Mandrel	1	0658-4013-20
R	Brass Seat, Mandrel	1	0658-4014-40
S	Mandrel, Mechanical Bottom Lock	1	0658-4015-20

1 - XX represents the barrel length in feet. Example: 0612-3704-20 is a 20' barrel.
2 - X represents plunger length, XX represents plunger fit. Example 0649-3703-47 is 3 ft. long with a -.003" fit.

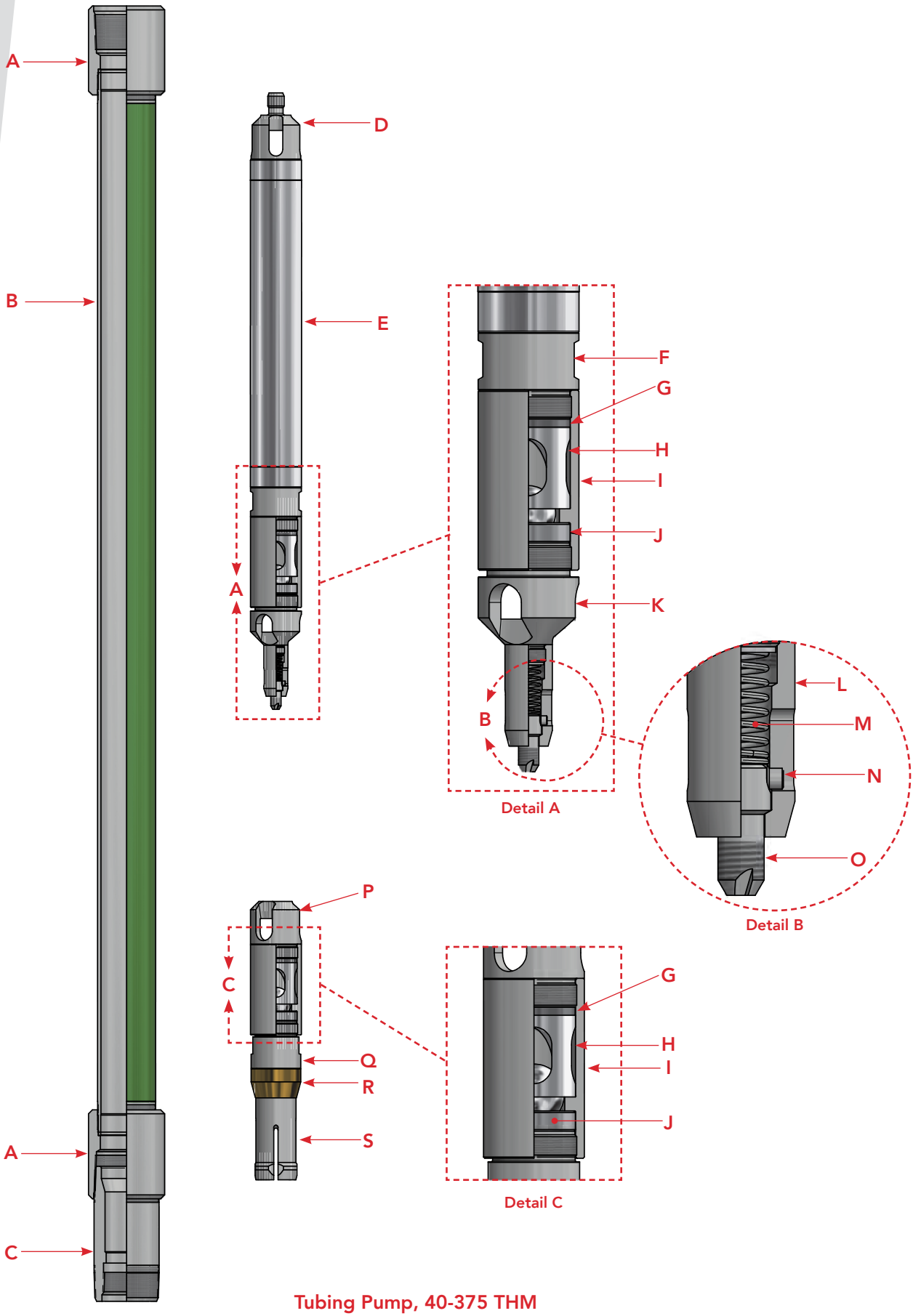

Tubing Pump, 40-375 THM

TWO-STAGE PUMPS

The DURA Two-Stage pump is designed to efficiently pump oil wells with a high gas-oil ratio and oil wells with dual completions, where the pump is operating under a packer with out the benefit of natural gas separation.

The DURA Two-Stage pump is basically a two-stage compressor in the form of a stationary, full barrel, rod actuated pump with a bottom hold down. The compression ratio has been "staged" by replacing the valve rod with an upper hollow plunger, with a smaller diameter than the primary plunger. Flow by the small plunger is stopped by a short liner, which is installed in the upper section of the barrel. The lower end of the small plunger is connected to the large plunger by the use of a closed valve cage with a ball and seat and an open plunger-connecting cage, which is also fitted with a ball and seat. The annulus between the barrel and the upper plunger acts as the second stage of the compressor, with the large plunger working as the first stage.

The discharge valve next to the hollow pull tube or upper discharge valve shields the middle or intermediate discharge valve from the high tubing or discharge pressure when the pump does not fill completely. This reduced pressure on the intermediate valve allows it to open at a higher point in the down stroke than it would if it was installed in a conventional pump. The produced fluid flows by the intermediate valve and into the chamber created between the upper plunger and the barrel. On the upstroke this fluid is compressed between the closed intermediate valve and the liner surrounding the pull tube; This forces the upper discharge valve to open and produced fluid to flow into the tubing and out of the well.

The DURA Two-Stage pump offer three advantages:

1. It is almost impossible to gas lock.
2. The pump will not "pound fluid", even with low fluid levels.
3. The reduced area design of the compression chamber insures higher pump efficiency.

This style of pump is normally installed with a bottom cup or mechanical hold down.

Dura Products
A DISTRIBUTION NOW COMPANY

20-125-106 RHBC - See diagram next page

Travelling Assembly		
Item	Description	Part Number
A	Top Insert Cage	
A i	Connector	0620-1260-24
A ii	Gasket	0698-0929-00
A iii	Insert	0622-1259-79
A iv	Shell	0622-1273-21
B	Ball & Seat	0604-1211-16
C	Bushing	0608-2412-20
D	Upper Plunger (Perforated)	0635-116X-XX [1,2]
E	Middle Insert Cage	
E i	Bushing	0608-2612-20
E ii	Gasket	0698-0929-00
E iii	Insert	0622-1259-79
E iv	Shell	0622-1273-20
F	Ball & Seat	0604-1211-16
G	Lower Plunger	0629-120X-XX[3]
H	Bottom Insert Cage	
H i	Bushing	0622-1234-20
H ii	Gasket	0698-0929-00
H iii	Insert	0622-1259-79
H iv	Shell	0622-1273-20
I	Ball & Seat	0604-1211-16
J	Plug	0639-0512-10

Standing Assembly		
Item	Description	Part Number
K	Guide	0639-1511-10
L	Liner Jacket	0630-1011-03
M	Liner	0632-1111-36
N	Connector	0626-1218-11
O	Extension	0628-0112-XX[5]
P	Barrel, DURA G-CH	0612-1206-XX[4]
Q	Extension	0628-0112-XX[5]
R	Bottom Insert Cage	
R i	Connector	0622-1737-20
R ii	Gasket	0698-0931-00
R iii	Insert	0622-1759-79
R iv	Shell	0622-1773-20
S	Ball & Seat	0604-1716-16
T	Hold Down Assembly	
	Mandrel	0658-1001-10
	Cups (3)	2231-0110-80
	Spacers (2)	0658-1004-10
	Lock Nut	0658-1005-10
	Coupling	0658-1006-10

1. For item D: Two only, 3/8" OD holes 2.25" from bottom end of plunger, to be drilled at store.
2. X-XX represents length in inches. Example 0635-1162-26 = 226 inches long.
3. X represents the length of the plunger in feet. XX represents the plunger fit in inches. Example: 0629-1205-45 = 5 foot long plunger with a -.005" fit.
4. XX represents length of the barrel in feet. Example: 0612-1206-20 = 20 foot barrel.
5. XX represents length of the extension in inches. Example: 0628-0112-24 = 24 inch extension.

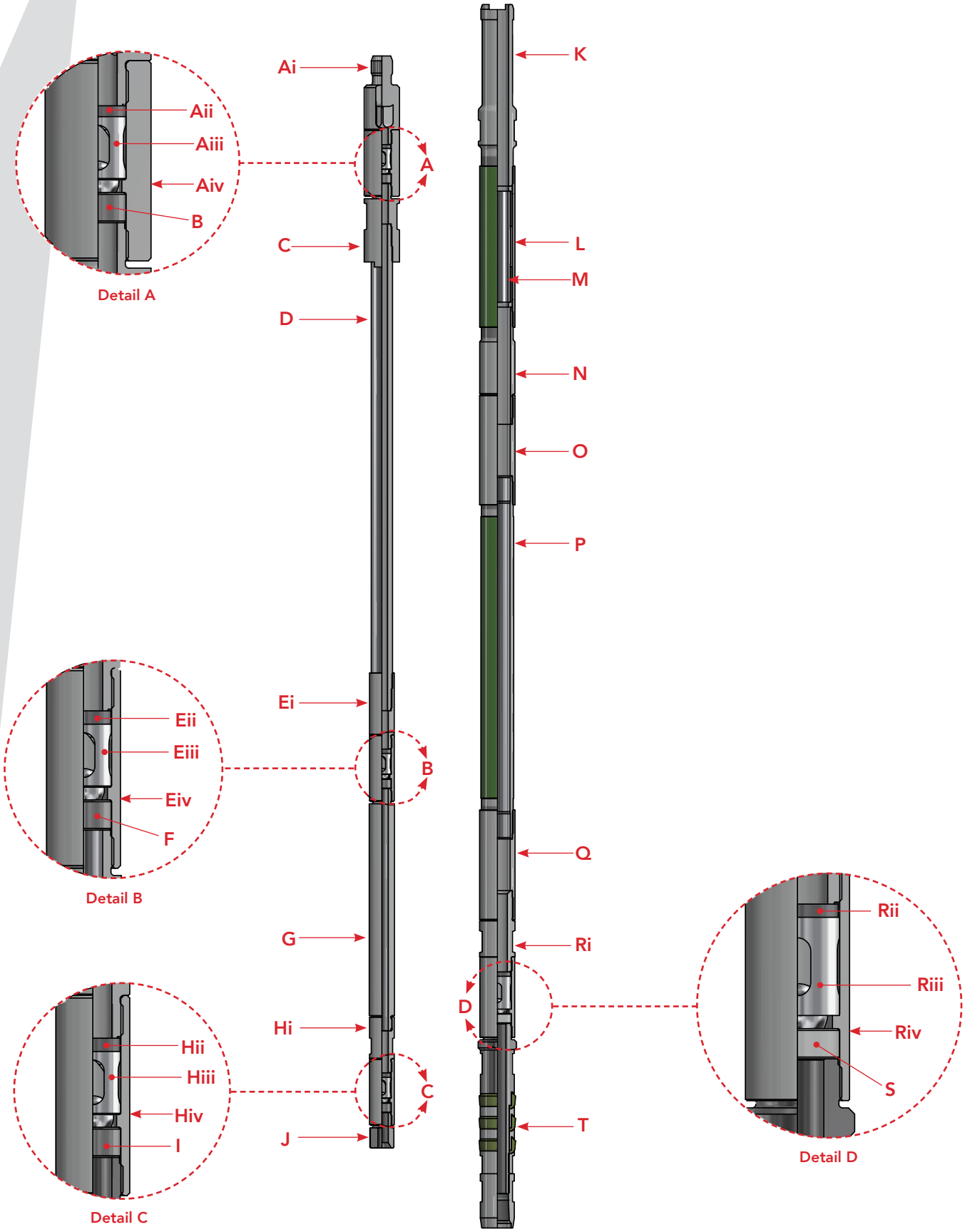

Two-Stage Pump - 20-125-106 RHBC

20-150-106 RWBC - See diagram next page

Travelling Assembly		
Item	Description	Part Number
A	Connector	0620-1260-24
B	Shell	0622-1273-21
C	Seat	0604-1200-00
D	Bushing	0608-2412-20
E	Upper Plunger	0635-116X-XX[1]
F	Top Insert Cage	
F i	Bushing	0608-2612-20
F ii	Gasket	0698-0929-00
F iii	Insert	0622-1259-79
F iv	Shell	0622-1273-20
F v	Ball & Seat	0604-1211-16
G	Middle Insert Cage	
G i	Connector	0622-1542-20
G ii	Gasket	0698-0930-00
G iii	Insert	0622-1559-79
G iv	Shell	0622-1573-20
G v	Ball & Seat	0604-1514-16
H	Lower Plunger	0629-140X-XX[2]
I	Bottom Insert Cage	
I i	Bushing	0622-1534-20
I ii	Gasket	0698-0930-00
I iii	Insert	0622-1559-79
I iv	Shell	0622-1573-20
I v	Ball & Seat	0604-1514-16
J	Plug	0639-0515-10

Standing Assembly		
Item	Description	Part Number
K	Guide	0639-1511-10
L	Liner Jacket	0630-1011-03
M	Liner	0632-1111-36
N	Connector	0626-1218-11
O	Barrel, Dura G-CH	0610-1506-XX[3]
P	Bottom Insert Cage	
P i	Connector	0622-1737-20
P ii	Gasket	0698-0931-00
P iii	Insert	0622-1759-79
P iv	Shell	0622-1773-20
P v	Ball & Seat	0604-1716-16
Q	Hold Down Assembly	
	Mandrel	0658-1001-10
	Cups (3)	2231-0110-80
	Spacers (2)	0658-1004-10
	Lock Nut	0658-1005-10
	Coupling	0658-1006-10

1. X-XX represents length in inches. Example 0635-1162-26 = 226 inches long.
2. X represents the length of the plunger in feet. XX represents the plunger fit in inches. Example: 0629-1405-95 = 5 foot long plunger with a -.005" fit.
3. XX represents length of the barrel in feet. Example: 0610-1506-20 = 20 foot barrel.

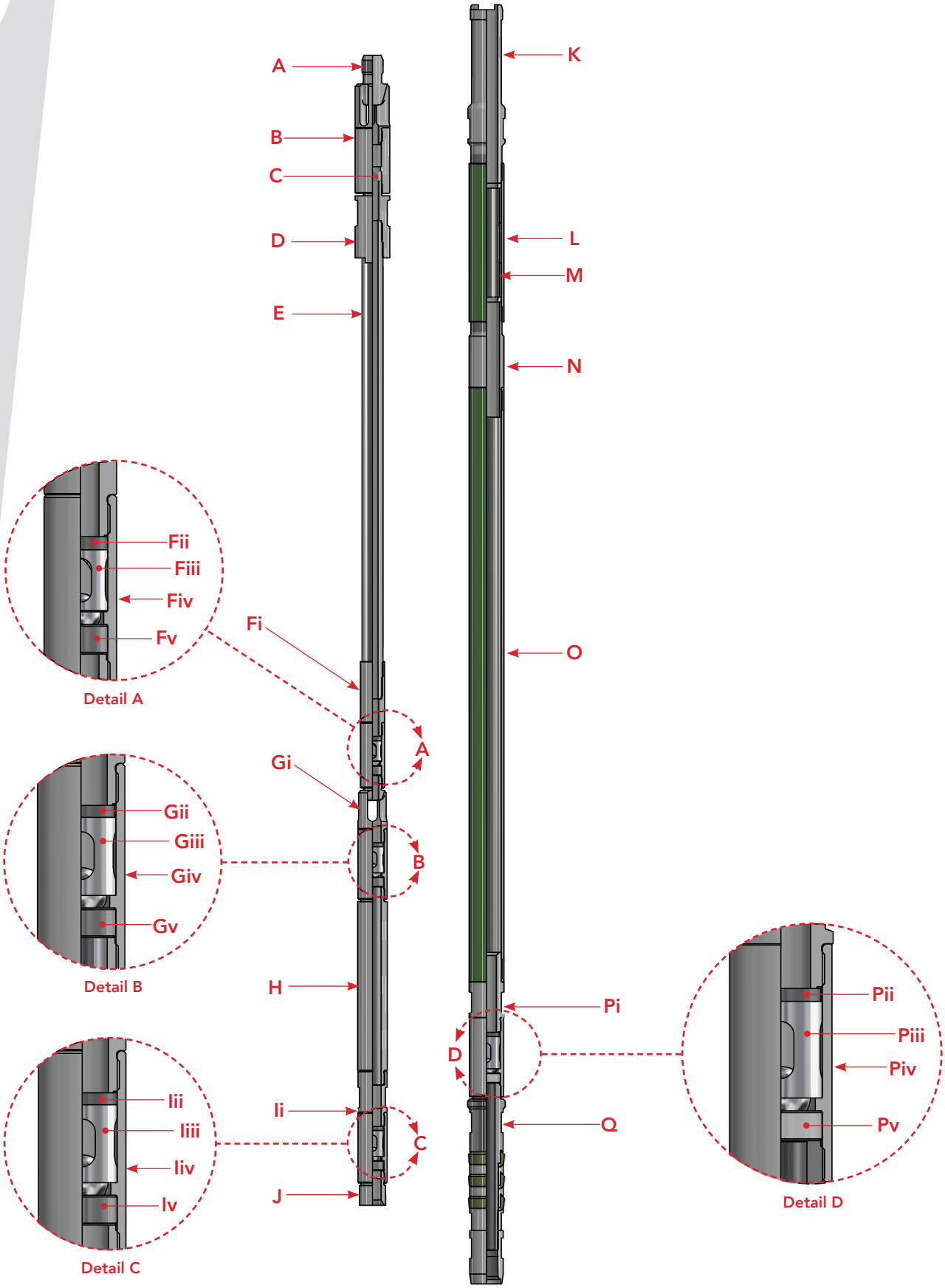

Two Stage Pump - 20-150-106 RWBC

25-175-125 RHBC - See diagram next page

Travelling Assembly		
Item	Description	Part Number
A	Connector	0620-2200-24
B	Seat	0604-2200-00
C	Bushing	0608-2417-20
D	Upper Plunger	0635-126X-XX[1]
E	Top Insert Cage	
E i	Bushing	0608-2617-20
E ii	Gasket	0698-0930-00
E iii	Insert	0622-1559-79
E iv	Shell	0622-1573-20
E v	Ball & Seat	0604-1514-16
F	Middle Insert Cage	
F i	Connector	0622-1742-20
F ii	Gasket	0698-0931-00
F iii	Insert	0622-1759-79
F iv	Shell	0622-1773-20
F v	Ball & Seat	0604-1716-16
G	Lower Plunger	0629-170X-XX[2]
H	Bottom Insert Cage	
H i	Bushing	0622-1734-20
H ii	Gasket	0698-0931-00
H iii	Insert	0622-1759-79
H iv	Shell	0622-1773-20
H v	Ball & Seat	0604-1716-16
I	Plug	0639-0517-10

Standing Assembly		
Item	Description	Part Number
J	Guide	0639-1512-11
K	Liner Jacket	0630-2011-03
L	Liner	0632-2121-36
M	Connector	0626-1518-21
N	Extension	0628-0117-XX[4]
O	Barrel, Dura G-CH	0612-1706-XX[3]
P	Extension	0628-0117-XX[4]
Q	Bottom Insert Cage	
Q i	Connector	0622-2237-20
Q ii	Gasket	0698-0933-00
Q iii	Insert	0622-2259-79
Q iv	Shell	0622-2273-20
Q v	Ball & Seat	0604-2220-16
R	Hold-Down Complete	
	Mandrel	0658-2001-10
	Cups (3)	2231-0114-10
	Spacers (2)	0658-2004-10
	Lock Nut	0658-2005-10
	Coupling	0658-2006-10

1. X-XX represents length in inches. Example 0635-1162-26 = 226 inches long.
2. X represents the length of the plunger in feet. XX represents the plunger fit in inches.
   Example: 0629-1705-45 = 5 foot long plunger with a -.005" fit.
3. XX represents length of the barrel in feet. Example: 0612-1706-20 = 20 foot barrel.
4. XX represents length of the extension in inches. Example: 0628-0117-24 = 24 inch extension.

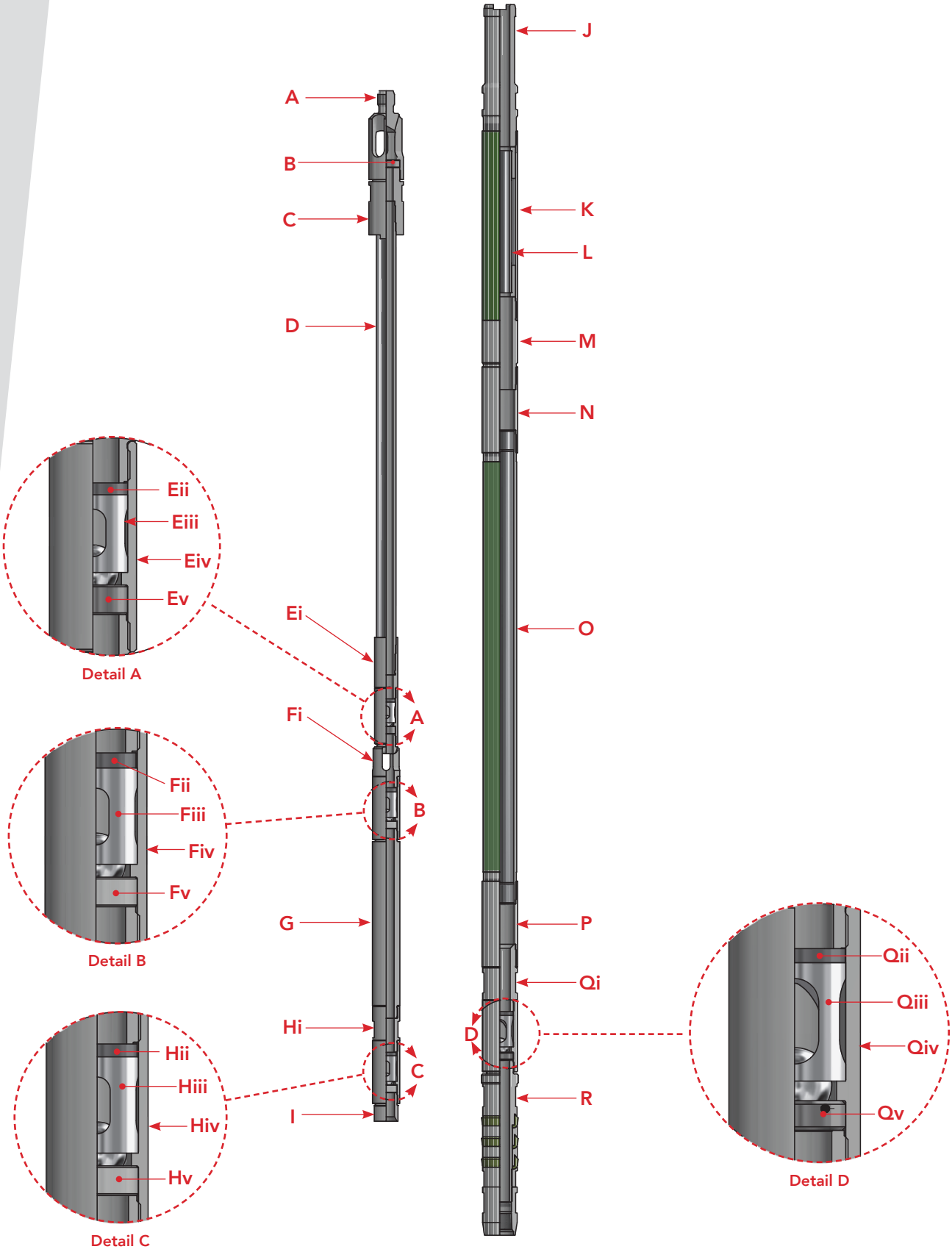

Two Stage Pump - 25-175-125 RHBC

25-200-125 RWBC - See diagram next page

Travelling Assembly		
Item	Description	Part Number
A	Connector	0620-2200-24
B	Seat	0604-2200-00
C	Bushing	0608-2417-20
D	Upper Plunger	0635-126X-XX[1]
E	Top Insert Cage	
E i	Bushing	0608-2620-20
E ii	Gasket	0698-0931-00
E iii	Insert	0622-1759-79
E iv	Shell	0622-1773-20
E v	Ball & Seat	0604-1716-16
F	Middle Insert Cage	
F i	Connector	0622-2042-21
F ii	Gasket	0698-0932-00
F iii	Insert	0622-2059-79
F iv	Shell	0622-2073-20
F v	Ball & Seat	0604-2018-16
G	Lower Plunger	0629-190X-XX[2]
H	Bottom Insert Cage	
H i	Bushing	0622-2034-20
H ii	Gasket	0698-0932-00
H iii	Insert	0622-2059-79
H iv	Shell	0622-2073-20
H v	Ball & Seat	0604-2018-16
I	Plug	0639-0520-10

Standing Assembly		
Item	Description	Part Number
J	Guide	0639-1512-11
K	Liner Jacket	0630-2011-03
L	Liner	0632-2121-36
M	Connector	0626-1718-21
N	Barrel, Dura G-CH	0610-2006-XX[3]
O	Bottom Insert Cage	
O i	Connector	0622-2237-20
O ii	Gasket	0698-0933-00
O iii	Insert	0622-2259-79
O iv	Shell	0622-2273-20
O v	Ball & Seat	0604-2220-16
P	Hold-Down Complete	
	Mandrel	0658-2001-10
	Cups (3)	2231-0114-10
	Spacers (2)	0658-2004-10
	Lock Nut	0658-2005-10
	Coupling	0658-2006-10

1. X-XX represents length in inches. Example 0635-1162-07 = 207 inches long.
2. X represents the length of the plunger in feet. XX represents the plunger fit in inches.
   Example: 0629-1905-95 = 5 foot long plunger with a -.005" fit.
3. XX represents length of the barrel in feet. Example: 0610-2006-20 = 20 foot barrel.

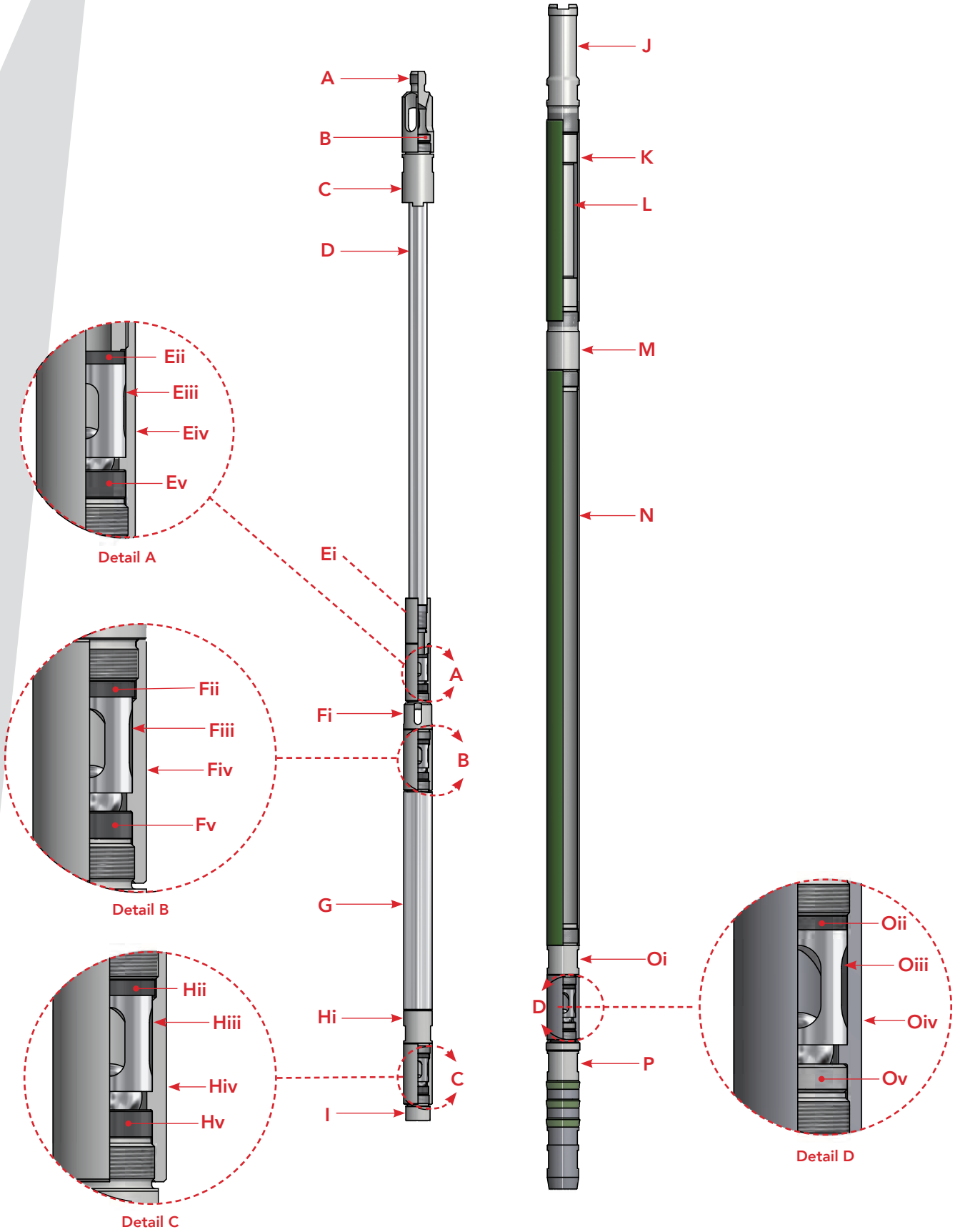

Two Stage Pump - 25-200-125 RWBC

STANDARD SIZES

	20-125-106-RHBC	20-150-106-RWBC	25-175-125-RHBC	25-200-125-RWBC
Upper Plunger	226"	207"	220"	207"
Barrel	20'	20'	20'	20'
Lower Plunger	5'	5'	5'	5'
Extensions (2)	6"	—	6"	—
Max. Stroke	177"	158"	170"	157"

OVERSIZED TUBING PUMPS

The DURA PRODUCTS "Oversized" tubing pump allows the operator to obtain maximum production in wells where running larger tubing would not be possible or economic. The barrel of the pump is run on the tubing string with the standing valve in place. The standing valve and the travelling assembly cannot be replaced without pulling the tubing. To eliminate pulling with a wet string it is strongly recommended that a tubing drain be installed in the tubing string. The travelling assembly is run in the well with the barrel assembly and part of the On & Off tool, while the other part of the On & Off tool is run later on the end of the sucker rod string. The travelling valve may be run at the top or the bottom of the plunger. Either standard or insert style cages may be run with the "Oversized" tubing pump (where available).

Dura Products™
A DISTRIBUTION NOW™ COMPANY

20-225 THO FOR 5-1/2" 14.0 LBS/FT CASING - See diagram next page

Standing Assembly		
Item	Description	Part Numbers
A	Coupling, Barrel, 2-7/8" EUE Box (3.687" O.D.)	0628-1820-25
B	Barrel, 2-1/4" TH, Dura G-CH[1]	0612-2204-XX
C	Clutch Ring	0699-8720-11
D	Bushing, Barrel (3.668" O.D.)	0699-8720-10
E	Gasket	0698-1041-07
F	Insert	0622-3759-79
G	Shell (3.720 O.D.)	0622-3766-20
H	Ball and Seat	0604-3732-16
I	Nut, Lock	0638-3799-01
J	Connector, 2-7/8" EUE Pin (3.750 O.D.)	0626-3799-41
Travelling Assembly		
Item	Description	Part Numbers
K	Connector, 3/4" S.R. Pin	0626-2269-24
L	Plunger, Spray Metal, Box End[2]	0649-220X-XX
M	Connector, BE Plunger To Cage	0622-2234-21
N	Gasket	0698-0933-00
O	Insert	0622-2259-79
P	Shell	0622-2273-20
Q	Ball and Seat	0604-2220-16
R	Plug, Clutched	0639-0522-11
	On/Off Attachment	
	Mounted On Plunger, 1.800 O.D., 3/4" Connection	0699-0100-16

1 - XX represents the barrel length in feet. Contact plant for barrel length availability.
2 - X-XX represents length in feet (first X) and plunger fit (XX). Example 0649-2203-47 is a 3ft with -.003" fit.
This pump requires a full drift swage above Item 'A' for connection to 2-3/8" tubing.

	Tubing	Casing
Thread	2-3/8" EUE	5-1/2"
Weight	4.70 lbs/ft	14.0 lbs/ft
I.D.	1.995"	5.015"
Drift	1.901"	4.887"
Item A O.D.	3.687"	–
Item D O.D.	3.668"	–
Item J O.D.	3.750"	–

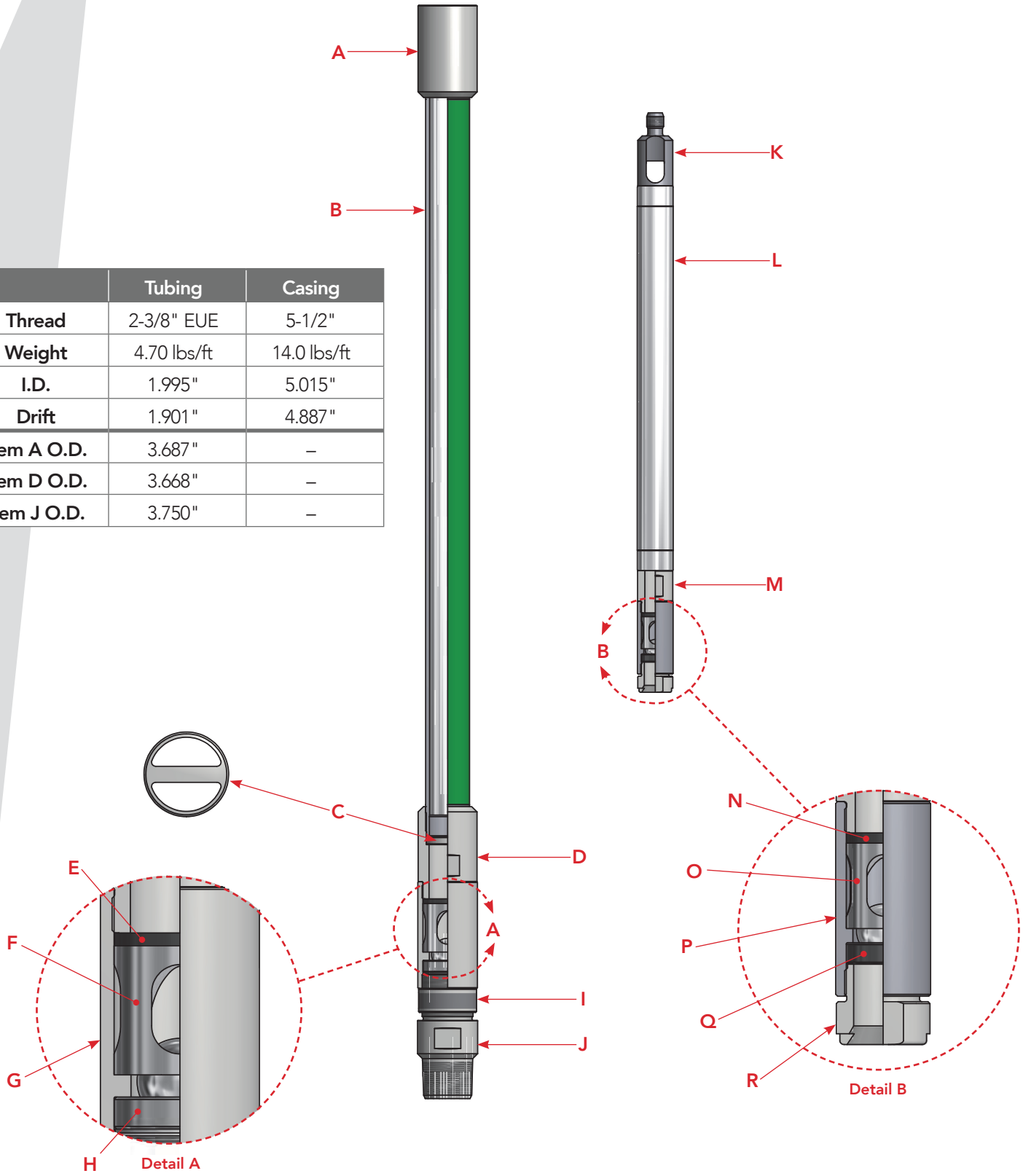

20-225 THO for 4-1/2" 12.6 lbs/ft Casing

Dura Products
A DISTRIBUTION NOW COMPANY

25-275 THO FOR 5-1/2" 14.0 LBS/FT CASING - See diagram next page

Standing Assembly		
Item	Description	Part Numbers
A	Connector, Barrel, 3-1/2" EUE (4.500" O.D.)	0628-1830-25
B	Barrel, 2-3/4" TH, Dura G-CH[1]	0612-2704-XX
C	Clutch Ring	0699-8700-11
D	Bushing, Barrel (3.668" O.D.)	0699-8700-10
E	Gasket	0698-1041-07
F	Insert	0622-3759-79
G	Shell	0622-3766-20
H	Ball and Seat	0604-3732-16
I	Nut, Lock	0638-3799-01
J	Connector, 2-7/8" EUE Pin (3.750 O.D.)	0626-3799-41
Travelling Assembly		
Item	Description	Part Numbers
K	Connector, 7/8" S.R. Pin	0626-2769-25
L	Plunger, Metal Spray, Box End[2]	0649-270X-XX
M	Connector	0622-2735-20
N	Gasket	0698-1041-00
O	Insert	0622-2759-79
P	Shell	0622-2773-20
Q	Ball and Seat	0604-2724-16
R	Plug, Clutched	0639-0525-10
	On/Off Attachment	
	Mounted On Plunger, 2.312 O.D., 7/8" Connection	0699-0120-17

1 - XX represents the barrel length in feet. Contact plant for barrel length availability.
2 - X-XX represents length in feet (first X) and plunger fit (XX). Example 0649-2703-47 is a 3ft with -.003" fit.
This pump requires a full drift swage above Item 'A' for connection to 2-7/8" tubing.
If pump is to be run in 5-1/2" casing, it is recommended that barrel couplings be turned down to special clearance O.D. of 4.180".

	Tubing	Tubing	Casing
Thread	2-7/8" EUE	3-1/2" EUE	5-1/2"
Weight	6.50 lbs/ft	9.30 lbs/ft	14.0 lbs/ft
I.D.	2.441"	2.992"	5.012"
Drift	2.347"	2.867"	4.887"
Item A O.D.	4.500"	–	–
Item D O.D.	3.668"	–	–
Item J O.D.	3.750"	–	–

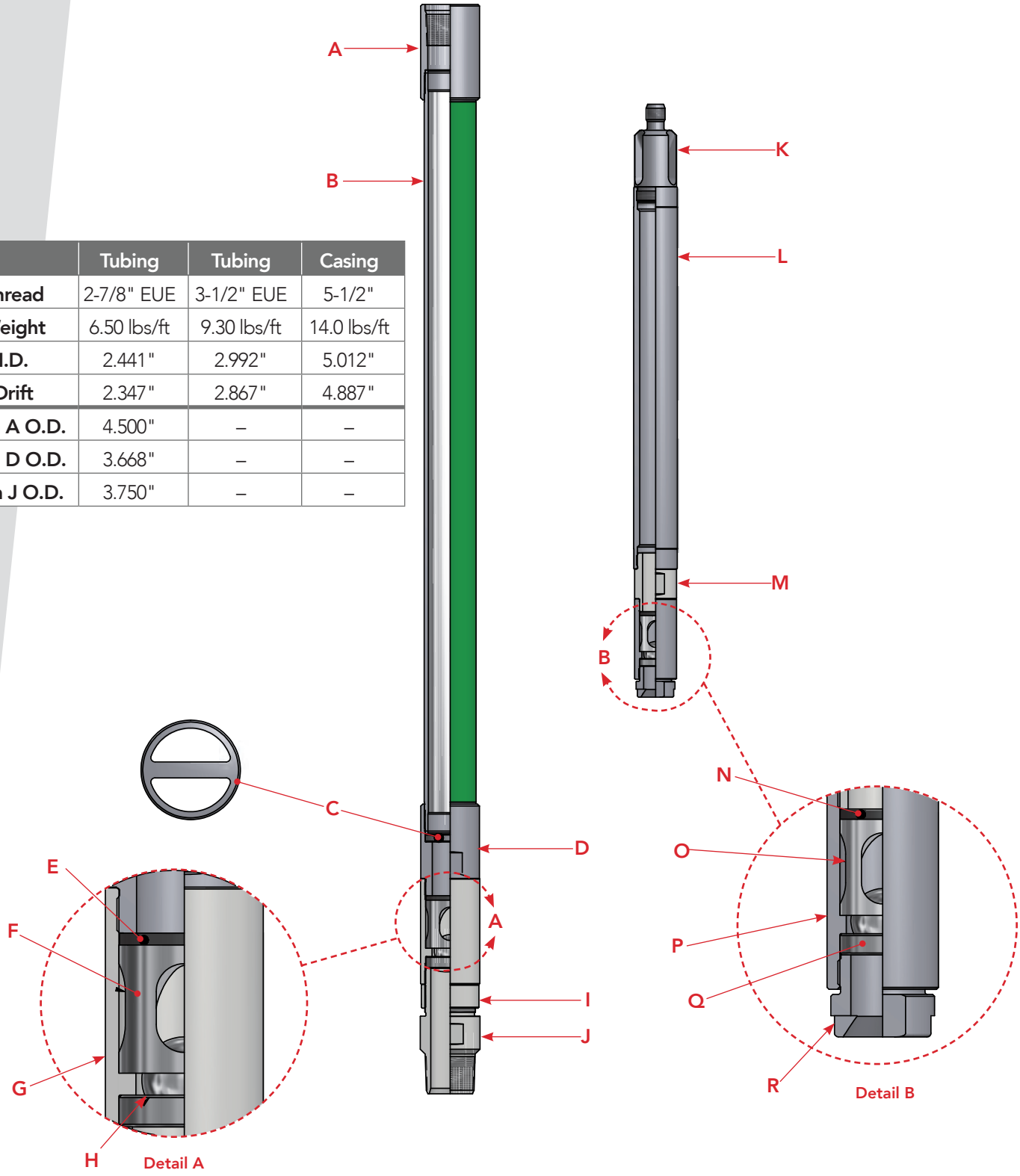

25-275 THO for 5-1/2" 15.5 lbs/ft Casing

Dura Products
A DISTRIBUTION NOW COMPANY

25-275 THO FOR 5-1/2" 14.0 LBS/FT CASING See diagram next page

Standing Assembly		
Item	Description	Part Numbers
A	Coupling, Barrel, 2-7/8" EUE (3.706" O.D.)	0628-4127-15
B	Barrel, 2-3/4" TH, Dura G-CH[1]	0612-2704-XX
C	Clutch Ring	0699-8700-11
D	Bushing, Barrel (3.668" O.D.)	0699-8700-10
E	Gasket	0698-1041-07
F	Insert	0622-3759-79
G	Shell	0622-3766-20
H	Ball and Seat	0604-3732-16
I	Nut, Lock	0638-3799-01
J	Connector, 2-7/8" EUE Pin (3.75 O.D.)	0626-3799-41
Travelling Assembly		
Item	Description	Part Numbers
K	Connector, 7/8" S.R. Pin	0626-2769-25
L	Plunger, Metal Spray, Box End[2]	0649-270X-XX
M	Connector	0622-2735-20
N	Gasket	0698-1041-00
O	Insert	0622-2759-79
P	Shell	0622-2773-20
Q	Ball and Seat	0604-2724-16
R	Plug, Clutched	0639-0525-10
	On/Off Attachment	
	Mounted On Plunger, 2.312 O.D., 7/8" Connection	0699-0120-17

1 - XX represents the barrel length in feet. Contact plant for barrel length availability.
2 - X-XX represents length in feet (first X) and plunger fit (XX). Example 0649-2703-47 is a 3ft with -.003" fit.

	Tubing	Casing
Thread	2-7/8" EUE	5-1/2"
Weight	6.50 lbs/ft	14.0 lbs/ft
I.D.	2.441"	5.012"
Drift	2.347"	4.887"
Item A O.D.	4.500"	–
Item D O.D.	3.668"	–
Item J O.D.	3.750"	–

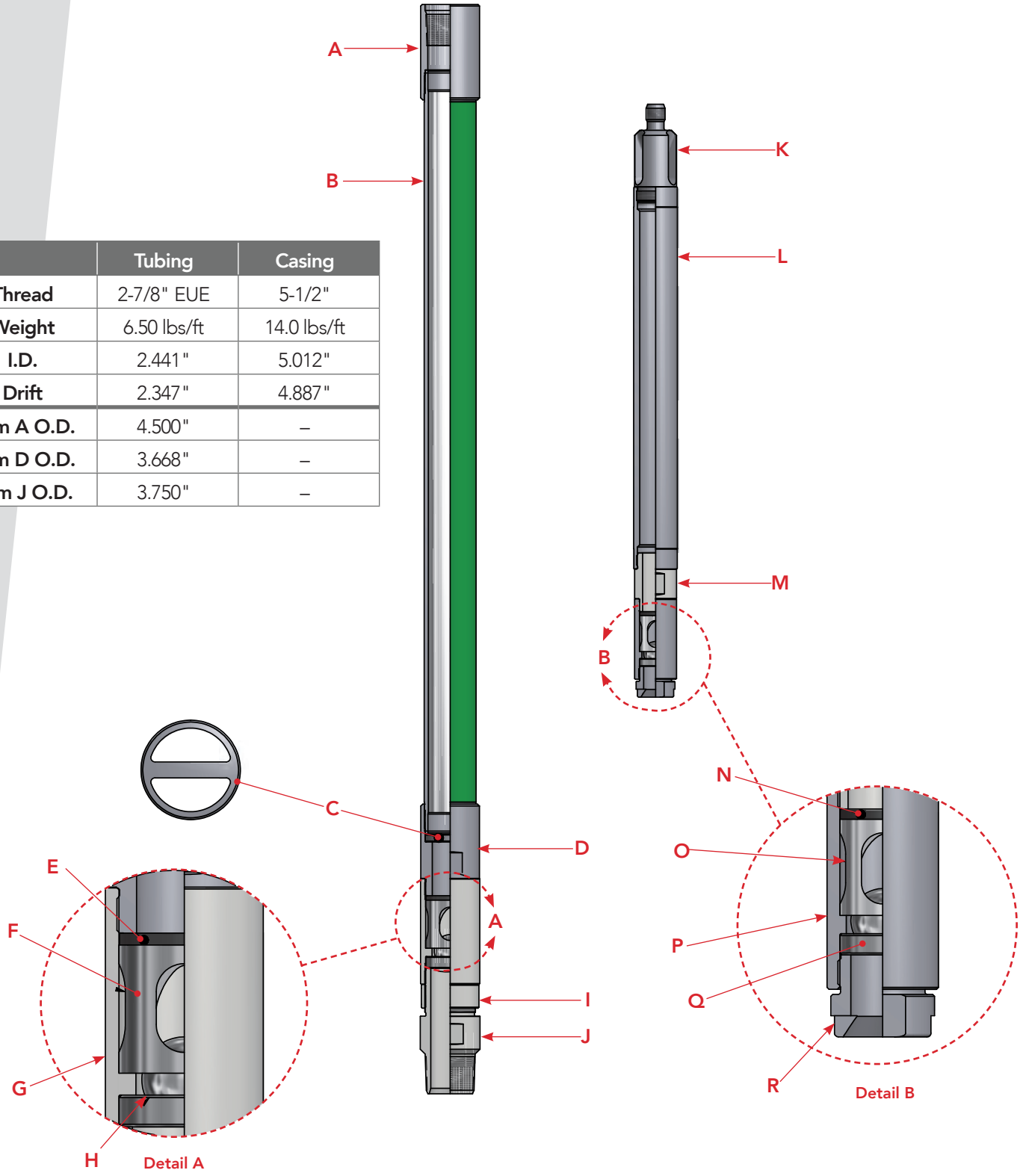

25-275 THO for 5-1/2" 15.5 lbs/ft Casing

Dura Products
A DISTRIBUTION NOW COMPANY

25-275 TXO FOR 4-1/2" 9.5 LBS/FT CASING - See diagram next page

Standing Assembly		
Item	Description	Part Numbers
A	Connector, Barrel, 2-7/8" EUE (3.250" O.D.)	0699-8696-10
B	Barrel, RX, 2-3/4", Dura G-CH[1]	0612-2754-XX
C	Connector, Clutched	0699-8695-10
D	Gasket	0698-1041-06
E	Insert	0622-3259-79
F	Shell	0622-3273-20
G	Ball and Seat	0604-3230-16
H	Nut, Lock (3.250" O.D.)	0638-2799-02
I	Connector, 2-7/8" EUE Pin (3.250" O.D.)	0626-2799-22
Travelling Assembly		
	Description	Part Numbers
J	Connector, 7/8" S.R. Pin	0626-2769-25
K	Plunger, Metal Spray, Box End[2]	0649-270X-XX
L	Connector	0622-2735-20
M	Gasket	0698-1041-00
N	Insert	0622-2759-79
O	Shell	0622-2773-20
P	Ball and Seat	0604-2724-16
Q	Plug, Clutched	0639-0525-10
	On/Off Attachment	
	Mounted On Plunger, 2.312 O.D., 7/8" Connection	0699-0120-17

1 - XX represents the barrel length in feet. Contact plant for barrel length availability.
2 - X-XX represents length in feet (first X) and plunger fit (XX). Example 0649-2703-47 is a 3ft with -.003" fit.

	Tubing	Casing
Thread	2-7/8" EUE	4-1/2"
Weight	6.5 lbs/ft	9.5 lbs/ft
I.D.	2.441"	4.090"
Drift	2.347"	3.965"
Item A O.D.	3.250"	–
Item H O.D.	3.250"	–
Item I O.D.	3.250"	–

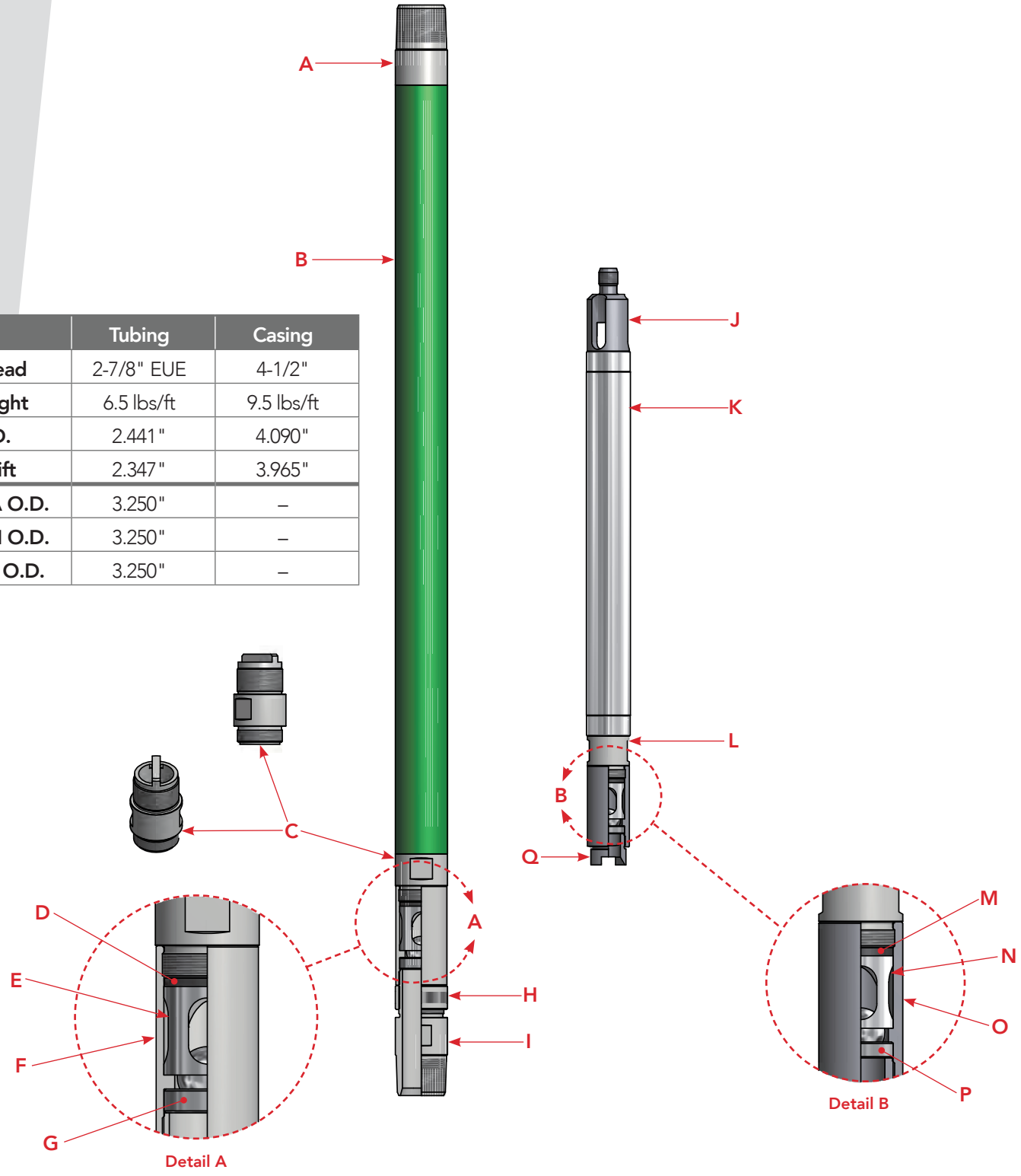

25-275 TXO for 4-1/2" 9.5 lbs/ft Casing

Dura Products
A DISTRIBUTION NOW COMPANY

25-325 TXO FOR 4-1/2" 9.5 LBS/FT CASING - See diagram next page

Standing Assembly		
Item	Description	Part Numbers
A	Connector, 2-7/8" EUE Pin (3.75 O.D., 2.44 I.D.)	0626-3298-41
B	Barrel, 3-1/4" RX, Dura G-CH[1]	0612-3254-XX
C	Connector, Barrel, Clutched	0626-3227-20
D	Gasket	0698-1041-07
E	Insert	0622-3759-79
F	Shell	0622-3766-20
G	Ball and Seat	0604-3732-16
H	Nut, Lock	0638-3799-01
I	Connector, 2-7/8" EUE (3.750" O.D.)	0626-3799-41
Travelling Assembly		
Item	Description	Part Numbers
J	Connector, 7/8" S.R. Pin	0626-3269-25
K	Plunger, Spray Metal, Box End[2]	0649-320X-XX
L	Connector, BE Plunger To Cage	0622-3235-20
M	Gasket	0698-1041-06
N	Insert	0622-3259-79
O	Shell	0622-3273-20
P	Ball and Seat	0604-3230-16
Q	Plug, Clutched	0638-3298-01
	On/Off Attachment	
	Mounted On Plunger, 2.312 O.D., 7/8" Connection	0699-0120-18
	Mounted In Tubing, 2.225 O.D., 7/8" Connection	0699-0110-21

1 - XX represents the barrel length in feet. Contact plant for barrel length availability.
2 - X-XX represents length in feet (first X) and plunger fit (XX). Example 0649-3203-47 is a 3ft with -.003" fit.

	Tubing	Casing
Thread	2-7/8" EUE	4-1/2"
Weight	6.5 lbs/ft	9.5 lbs/ft
I.D.	2.441"	4.090"
Drift	2.347"	3.965"
Item A O.D.	3.750"	–
Item I O.D.	3.750"	–

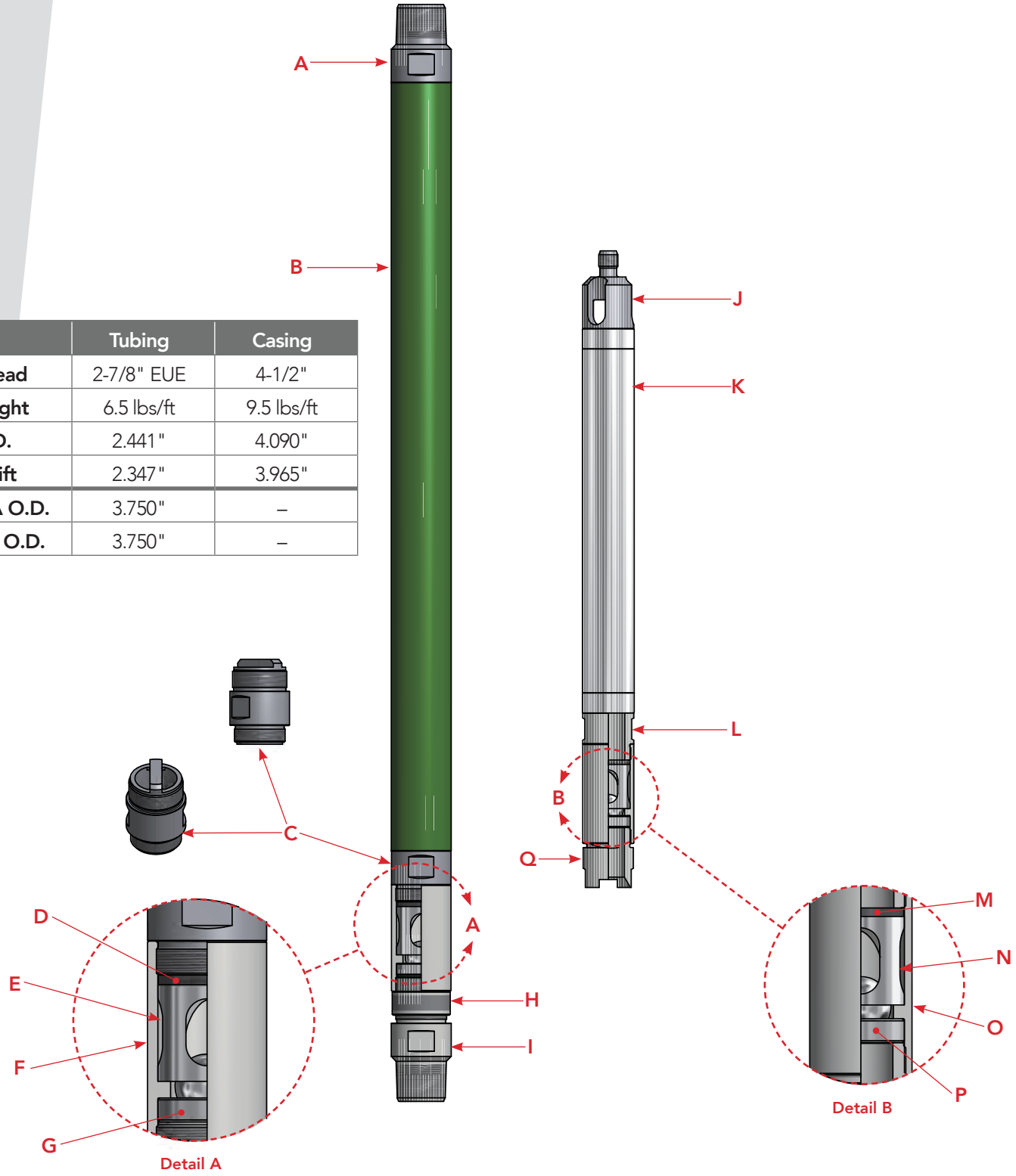

25-325 TXO for 4-1/2" 9.5 lbs/ft Casing

Dura Products
A DISTRIBUTION NOW COMPANY

30-325 TXO FOR 5-1/2" 14.0 LBS/FT CASING - See diagram next page

Standing Assembly		
Item	Description	Part Numbers
A	Connector, 3-1/2" EUE Pin, (3.750" O.D.)	0626-3203-32
B	Barrel, 3-1/4" RX, Dura G-CH[1]	0612-3254-XX
C	Connector, Clutched	0626-3227-20
D	Gasket	0698-1041-07
E	Insert	0622-3759-79
F	Shell	0622-3766-20
G	Ball & Seat	0604-3732-16
H	Nut, Lock	0638-3799-01
I	Connector, 2-7/8" EUE Pin (3.750" O.D.)	0626-3799-41
Travelling Assembly		
Item	Description	Part Numbers
J	Connector, 7/8" S.R. Thread	0626-3269-25
K	Plunger, Metal Spray, Box End[2]	0649-320X-XX
L	Connector	0622-3235-20
M	Gasket	0698-1041-06
N	Insert	0622-3259-79
O	Shell	0622-3273-20
P	Ball & Seat	0604-3230-16
Q	Plug, Clutched	0638-3298-01
	On/Off Attachment	
	Mounted On Plunger, 2.740 O.D., 1" Connection	0699-0130-18
	Mounted In Tubing, 2.312 O.D., 7/8" Connection	0699-0120-18

1 - XX represents the barrel length in feet. Contact plant for barrel length availability.
2 - X-XX represents length in feet (first X) and plunger fit (XX). Example 0649-3203-47 is a 3ft with -.003" fit.

	Tubing	Casing
Thread	3-1/2" EUE	5-1/2"
Weight	9.30 lbs/ft	14.0 lbs/ft
I.D.	2.992"	5.012"
Drift	2.867"	4.887"
Item A O.D.	3.750"	–
Item I O.D.	3.750"	–

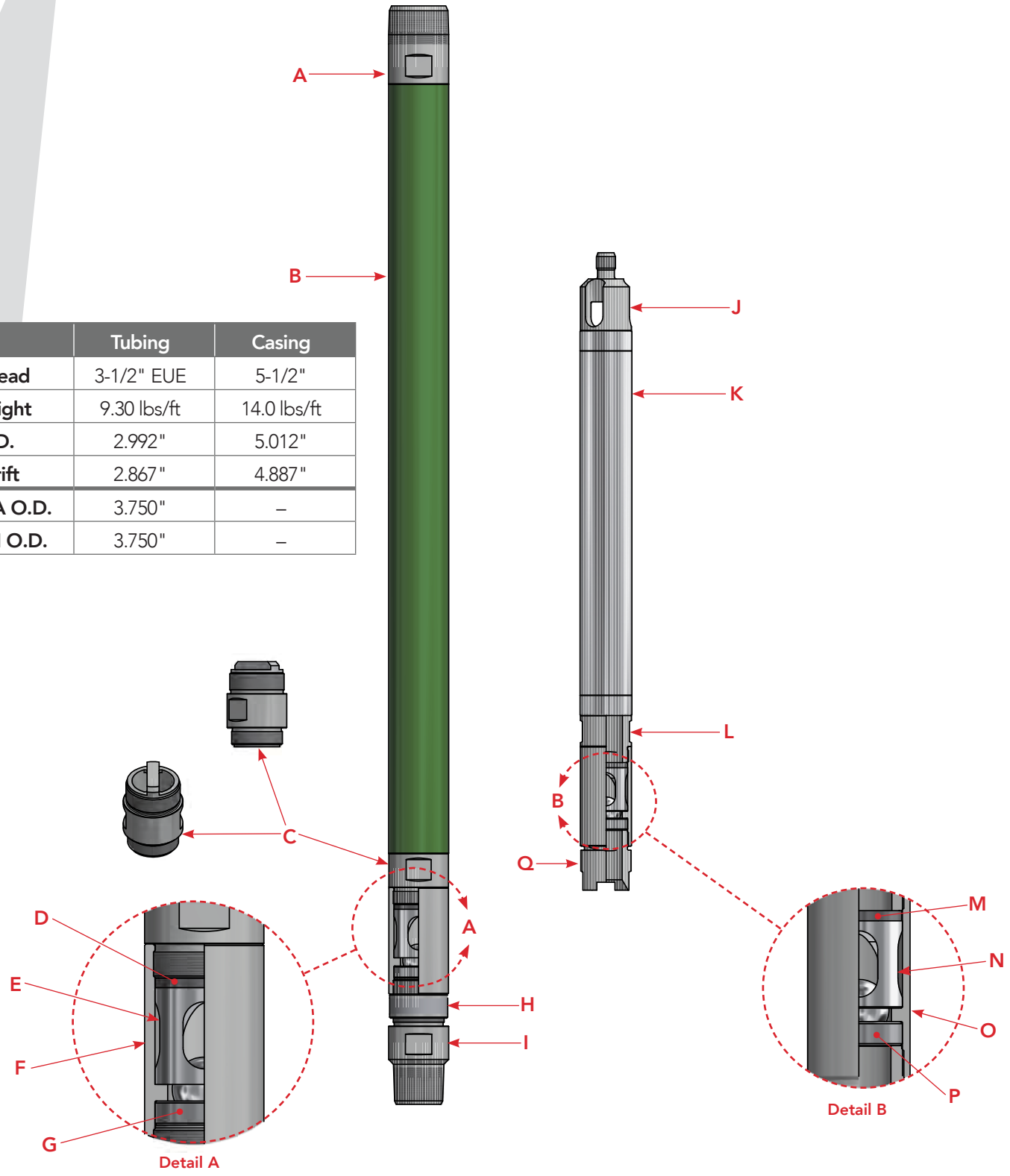

30-325 TXO for 5-1/2" 14.0 lbs/ft Casing

Dura Products
A DISTRIBUTION NOW COMPANY

25-375 TXO FOR 5-1/2" 14.0 LBS/FT CASING - See diagram next page

Standing Assembly		
Item	Description	Part Numbers
A	Connector, 2-7/8" EUE Pin, (4.25 O.D., 2.44 I.D.)	0626-3798-41
B	Barrel, 3-3/4" RX, Dura G-CH[1]	0612-3759-XX
C	Connector, Barrel, Clutched	0622-3737-20
D	Gasket	0698-1041-07
E	Insert	0622-3759-79
F	Shell	0622-3773-20
G	Ball and Seat	0604-3732-16
H	Nut, Lock	0638-3799-01
I	Connector, 2-7/8" EUE Pin	0626-3799-41
Travelling Assembly		
Item	Description	Part Numbers
J	Connector, 7/8" S.R. Pin	0626-3769-25
K	Plunger, Metal Spray, Box End[2]	0649-370X-XX
L	Connector	0626-3706-02
M	Gasket	0698-1041-07
N	Insert	0622-3759-79
O	Shell	0622-3766-20
P	Ball and Seat	0604-3732-16
Q	Plug, Clutched	0638-3798-01
	On/Off Attachment	
	Mounted On Plunger, 2.312 O.D., 7/8" Connection	0699-0120-19
	Mounted In Tubing, 2.225 O.D., 7/8" Connection	0699-0110-21

1 - XX represents the barrel length in feet. Contact plant for barrel length availability.
2 - X-XX represents length in feet (first X) and plunger fit (XX). Example 0649-3703-47 is a 3ft with -.003" fit.

	Tubing	Casing
Thread	2-7/8" EUE	5-1/2"
Weight	6.5 lbs/ft	14.0 lbs/ft
I.D.	2.441"	5.012"
Drift	2.347"	4.887"
Item A O.D.	4.250"	–
Item I O.D.	3.750"	–

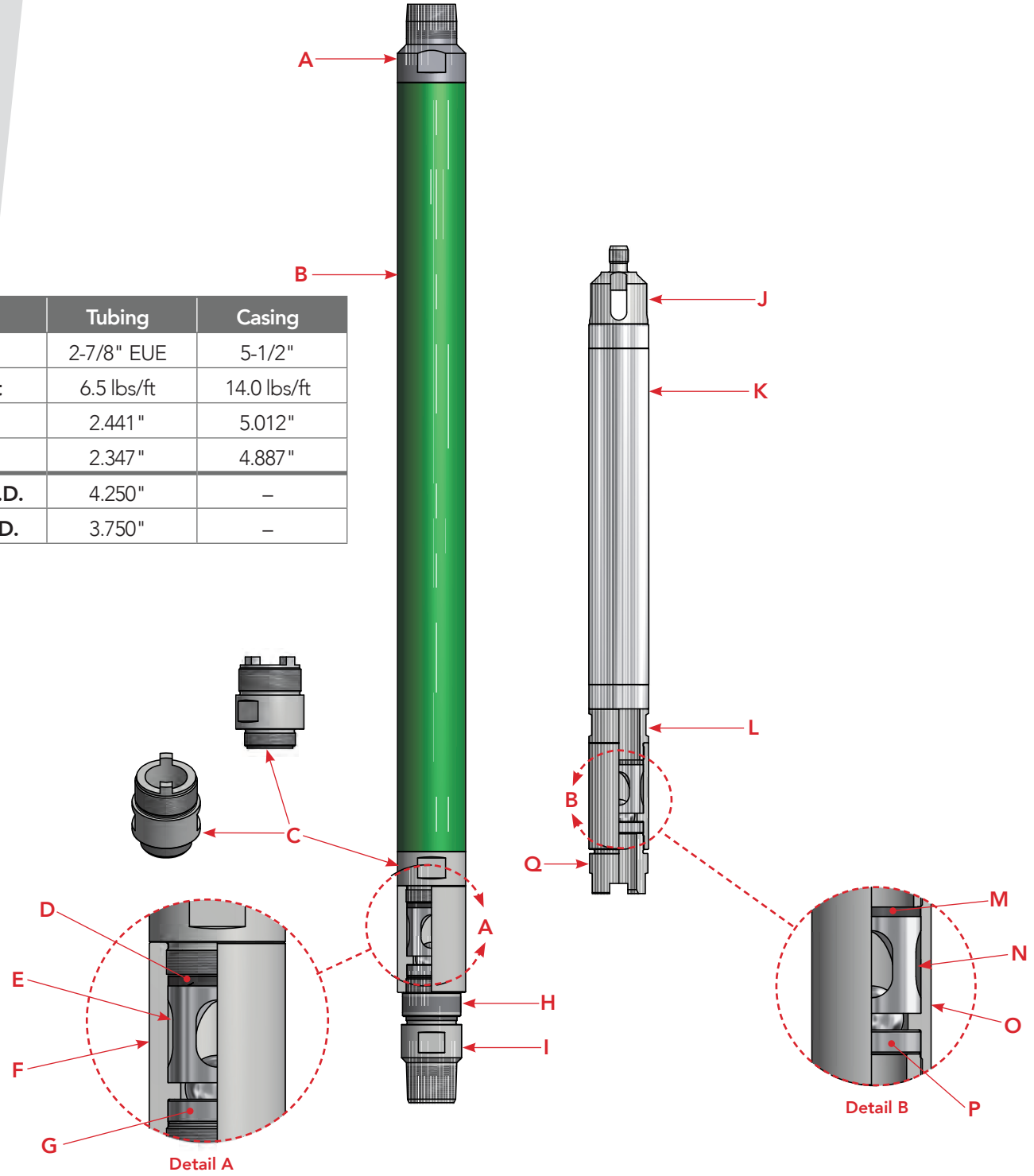

25-375 TXO for 5-1/2" 14.0 lbs/ft Casing

Dura Products
A DISTRIBUTION NOW COMPANY

30-375 TXO FOR 5-1/2" 14.0 LBS/FT CASING - See diagram next page

Standing Assembly		
Item	Description	Part Numbers
A	Bushing, 3-1/2" EUE Box (4.50" O.D., 3.00" I.D.)	0699-8710-10
B	Barrel, 3-3/4" RX, Dura G-CH[1]	0612-3759-XX
C	Connector, Barrel, Clutched	0622-3737-20
D	Gasket	0698-1041-07
E	Insert	0622-3759-79
F	Shell	0622-3773-20
G	Ball and Seat	0604-3732-16
H	Nut, Lock	0638-3799-01
I	Connector, 2-7/8" EUE Pin	0626-3799-41
Travelling Assembly		
Item	Description	Part Numbers
J	Connector, 7/8" S.R. Pin	0626-3769-25
K	Plunger, Metal Spray, Box End[2]	0649-370X-XX
L	Connector	0626-3706-02
M	Gasket	0698-1041-07
N	Insert	0622-3759-79
O	Shell	0622-3766-20
P	Ball and Seat	0604-3732-16
Q	Plug, Clutched	0638-3798-01
	On/Off Attachment	
	Mounted On Plunger, 2.740 O.D., 1" Connection	0699-0130-18
	Mounted In Tubing, 2.312 O.D., 7/8" Connection	0699-0120-18

1 - XX represents the barrel length in feet. Contact plant for barrel length availability.
2 - X-XX represents length in feet (first X) and plunger fit (XX). Example 0649-3703-47 is a 3ft with -.003" fit.
Item 'A' can be turned to barrel O.D. of 4.250" if required.

	Tubing	Casing
Thread	2-7/8" EUE	5-1/2"
Weight	6.5 lbs/ft	14.0 lbs/ft
I.D.	2.441"	5.012"
Drift	2.347"	4.887"
Item A O.D.	4.500"	–
Item I O.D.	3.750"	–

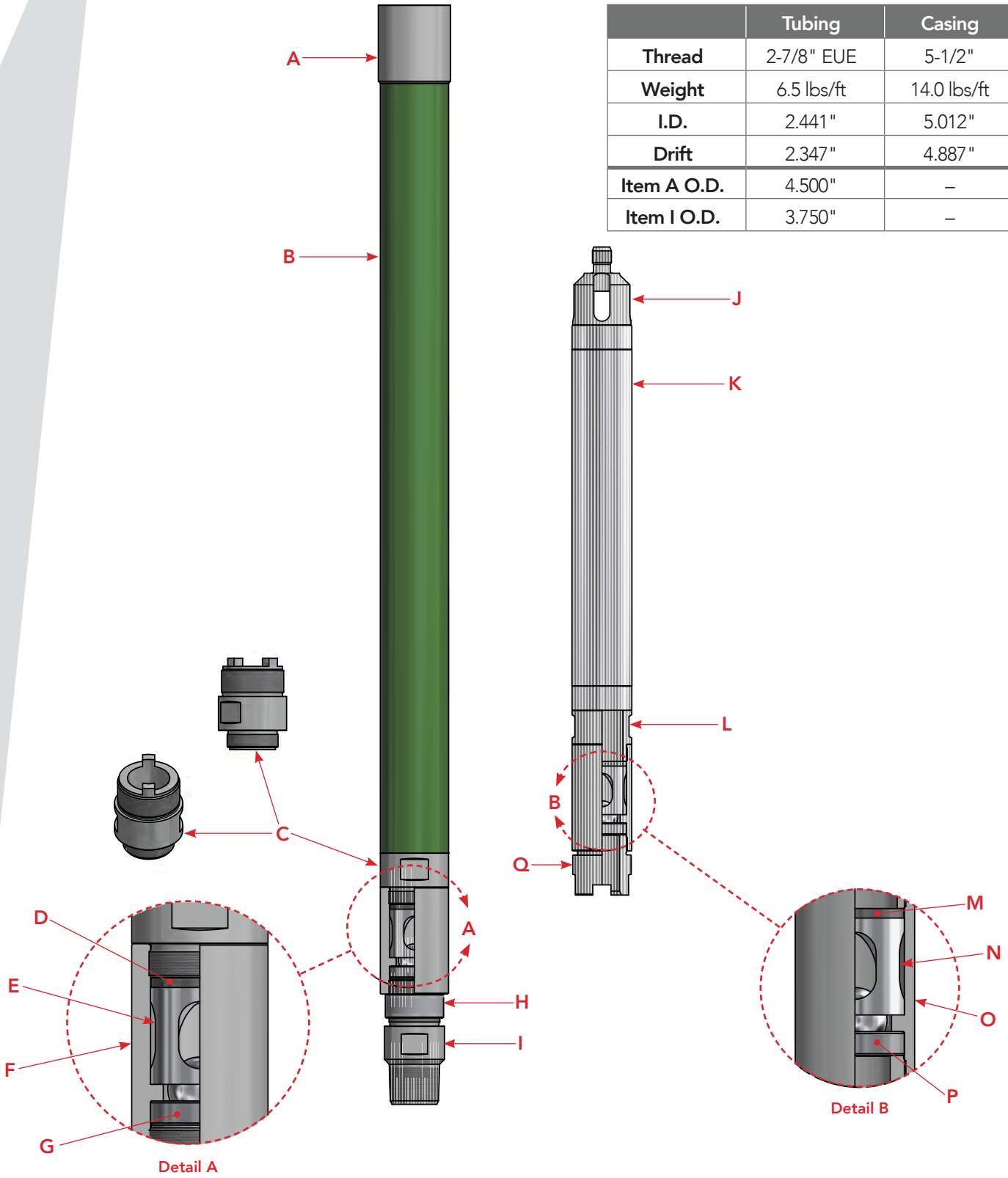

30-375 TXO for 5-1/2" 14.0 lbs/ft Casing

PULL TUBE PUMPS

The DURA Pull Tube Pump has been designed to supplement the existing line of down hole pumps. The use of pull tube instead of valve rod can provide a performance advantage over conventional pumps. The pull tube, because of its larger cross-sectional area, has higher buckling resistance when compared with valve rod or sucker rod. The pull tube pump may be the answer in wells where early failures can be attributed to the buckling of the valve rod or the bottom section of the sucker rod string. Reduced buckling can also produce longer plunger travel and higher productivity.

Currently five types of pull tube pumps are available. The Type 1 and the Type 5 share most components, except the Type 1 does not use the valve on the upper end of the pull tube. The Type 1 can be used as a direct replacement for any standard stationary barrel, top or bottom hold-down pump. The valves are in the standard locations and can be spaced close for gaseous wells. The Type 2 is a modified tubing pump. The Type 4 is similar to the Type 2, but incorporates an upper valve that improves pump efficiency when operated in gaseous wells. The Type 5 incorporates an upper valve that improves pump efficiency when operated in gaseous wells. The Type 6 is based on an oversized tubing pump.

Dura Products
A DISTRIBUTION NOW COMPANY

TYPE 2 TUBING PUMP - See diagram next page

This pump is intended as a direct replacement for a standard tubing pump. Its valve location is standard and requires only *three special parts for a changeover. The pull tube's resistance to buckling is greater than a sucker rod's, and where heavy buckling occurs, the pull tube pump has the potential to increase the plunger travel and increase fluid production.

Item	Description	2-7/8" Tubing	3-1/2" Tubing	4-1/2" Tubing
	Pull Tube Size	1-1/2" x 1-1/8"	1-7/8" x 1-3/8"	2-3/8" x 1.995"
	Travelling Assembly	2-1/4" Pump	2-3/4" Pump	3-3/4" Pump
A	Cage, Open, Top	0620-2200-24	0620-2700-25	0620-3700-25
B	Spacer	0604-2204-14	0604-2704-14	0604-3704-14
C*	Bushing, Pull Tube	0608-5020-20	0608-5025-20	0608-5037-20
D*	Pull Tube[1]	0662-201X-XX	0662-251X-XX	0662-321X-XX
E*	Coupling, Ported	0628-1322-20	0628-1327-20	0628-1337-20
F	Bushing, Insert Cage (2)	0622-2234-21	0622-2735-20	0626-3706-02
G	Plunger, Box-End, SM[2]	0649-220X-XX	0649-270X-XX	0649-370X-XX
F	Bushing, Insert Cage	0622-2234-21	0622-2735-20	0626-3706-02
H	Gasket	0698-0933-00	0698-1041-00	0698-1041-07
I	Insert Cage	0622-2259-79	0622-2759-79	0622-3759-79
J	Shell, Insert Cage	0622-2273-20	0622-2773-20	0622-3766-20
K	Ball & Seat	0604-2220-16	0604-2724-16	0604-3732-16
L	Connector, Puller	0654-0222-51	0654-0227-51	0654-0237-71
M	Housing, Puller	0654-0300-01	0654-0300-01	0654-0300-11
N	Spring, Puller	0654-0400-06	0654-0400-06	0654-0400-06
O	Pin, Puller	0654-0500-01	0654-0500-01	0654-0500-01
P	Tap, Puller	0654-0600-01	0654-0600-01	0654-0600-01
	Retrievable Standing Valve			
Q	Cage, Standing Valve	0620-2202-20	0620-2702-20	0620-3777-20
R	Gasket (not shown)	—	—	0698-1041-07
S	Insert Cage (not shown)	—	—	0622-3759-79
T	Shell, Insert Cage (not shown)	—	—	0622-3766-20
U	Ball & Seat	0604-2222-16	0604-2727-16	0604-3732-16
V	Bushing, Hold Down	0658-2013-20	0658-3013-20	0658-4013-20
W	Seat, Brass	0658-2014-40	0658-3014-40	0658-4014-40
X	Lock, Hold Down	0658-2015-21	0658-3015-20	0658-4015-20
	Standing Assembly			
Y	Coupling, Barrel (2)	0628-1820-25	0628-1830-25	0628-1845-19
Z	Barrel, Dura G-CH[3]	0612-2204-XX	0612-2704-XX	0612-3704-XX
Y	Coupling, Barrel	0628-1820-25	0628-1830-25	0628-1845-19
AA	PSN, Mechanical	0636-2051-15	0636-0130-15	0636-0140-15

1 - X's represent pull tube length in inches.
2 - X-XX represents length in feet (first X) and plunger fit (XX). Example 0629-2203-47 is a 3ft with -.003" fit.
3 - XX represents the barrel length in feet. Contact plant for barrel length availability.

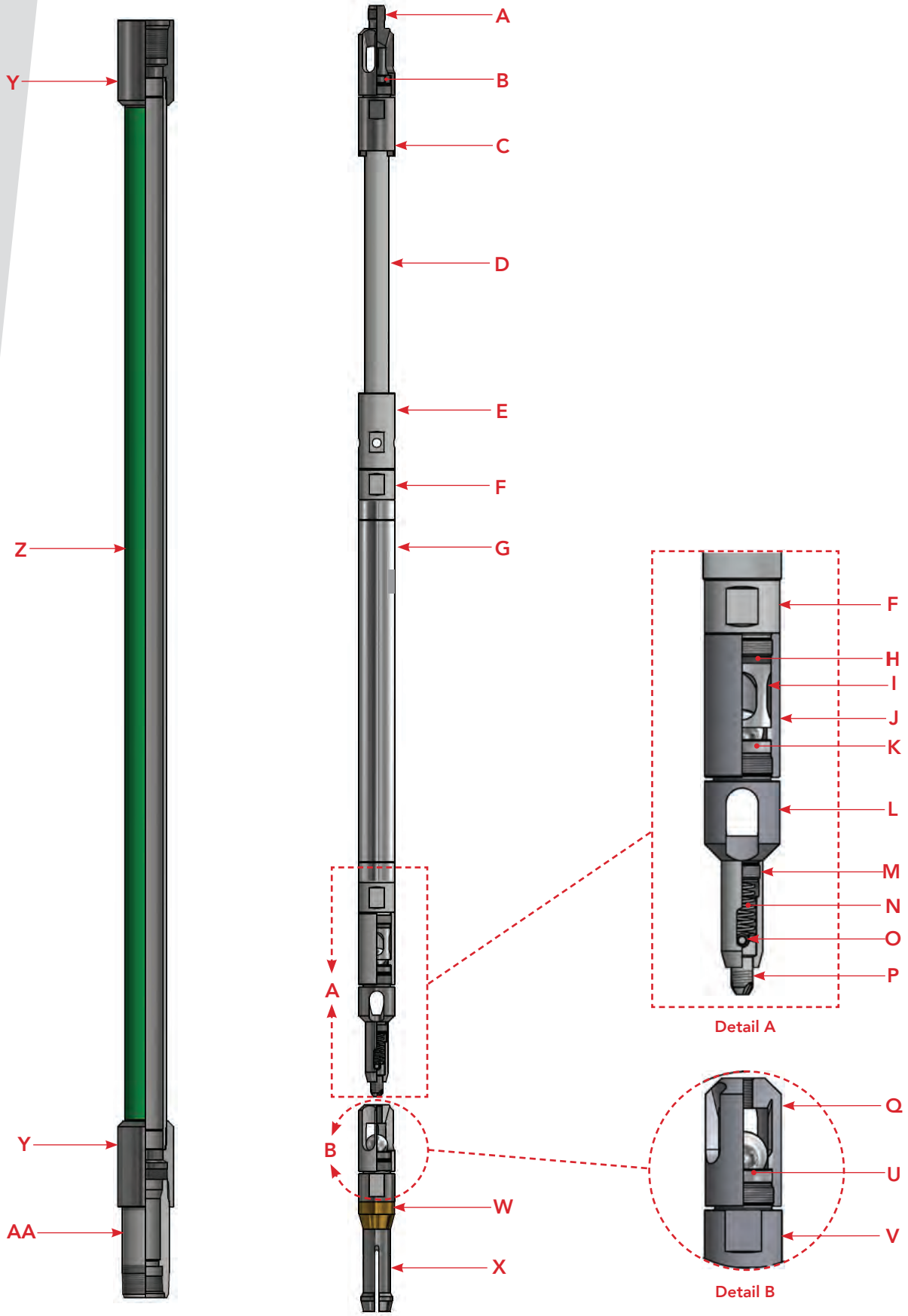

Type 2 Pull Tube Tubing Pump

25-225 TH TYPE 4 TUBING PUMP - See diagram next page

The Type Four pull tube pump incorporates a travelling valve on top of the pull-tube and on the bottom of the plunger, with a perforated coupling between the pull-tube and the plunger. The top ball and seat work like a spool-check valve by keeping the hydrostatic head off the travelling valve on the down stroke. The seal at the insert-type guide assembly is not positive and allows new fluid into the top of the pump. This helps prevent gas lock at the top of the stroke. On the down stroke the close fit between the guide and the pull-tube creates a small pressure drop above the plunger in the pump chamber. This reduces the pressure on the travelling valve and allows easier flow of the gaseous formation fluid into the plunger and increases the pump efficiency.

The parts marked with a "*" must be changed from or added to the standard tubing pump assembly to create the type 4 pull tube tubing pump.

Item	Travelling Assembly	Part Number
A*	Cage, Open, Top	0620-2200-24
B*	Ball & Seat	0604-2222-16
C*	Bushing, Pull Tube	0608-5020-20
D*	Pull Tube[1]	0662-201X-XX
E*	Coupling, Ported	0628-1322-20
F*	Bushing, Insert Cage	0622-2234-21
G	Plunger, Box-End, SM[2]	0649-220X-XX
F	Bushing, Insert Cage	0622-2234-21
H	Gasket	0698-0933-00
I	Insert Cage	0622-2259-79
J	Shell, Insert Cage	0622-2273-20
K	Ball & Seat	0604-2220-16
L	Connector, Puller	0654-0222-51
M	Housing, Puller	0654-0300-01
N	Spring, Puller	0654-0400-06
O	Pin, Puller	0654-0500-01
P	Tap, Puller	0654-0600-01

Item	Retrievable Standing Valve	Part Number
Q	Cage, Standing Valve	0620-2202-20
R	Ball & Seat	0604-2222-16
S	Bushing, Lock	0658-2013-20
T	Seat, Brass	0658-2014-40
U	Lock, Hold Down	0658-2015-21
	Upper Hold Down	
V*	Guide, Pull Tube, Type 'O'	0658-2090-21
W*	Mandrel, Type 'O'	0699-8615-20
X*	Cup, Type 'O', 2-1/4 +70 (3)	2231-8003-45
Y*	Spacer, Type 'O' (2)	0699-8616-10
Z*	Nut, Type 'O'	0699-8617-10
	Standing Assembly	
AA	Coupling, Barrel	0628-1820-25
BB	Barrel, Dura G-CH[3]	0612-2204-XX
AA	Coupling, Barrel	0628-1820-25
CC	PSN, Mechanical	0636-2051-15

1 - X's represent pull tube length in inches.
2 - X-XX represents length in feet (first X) and plunger fit (XX). Example 0629-2203-47 is a 3ft with -.003" fit.
3 - XX represents the barrel length in feet. Contact plant for barrel length availability.

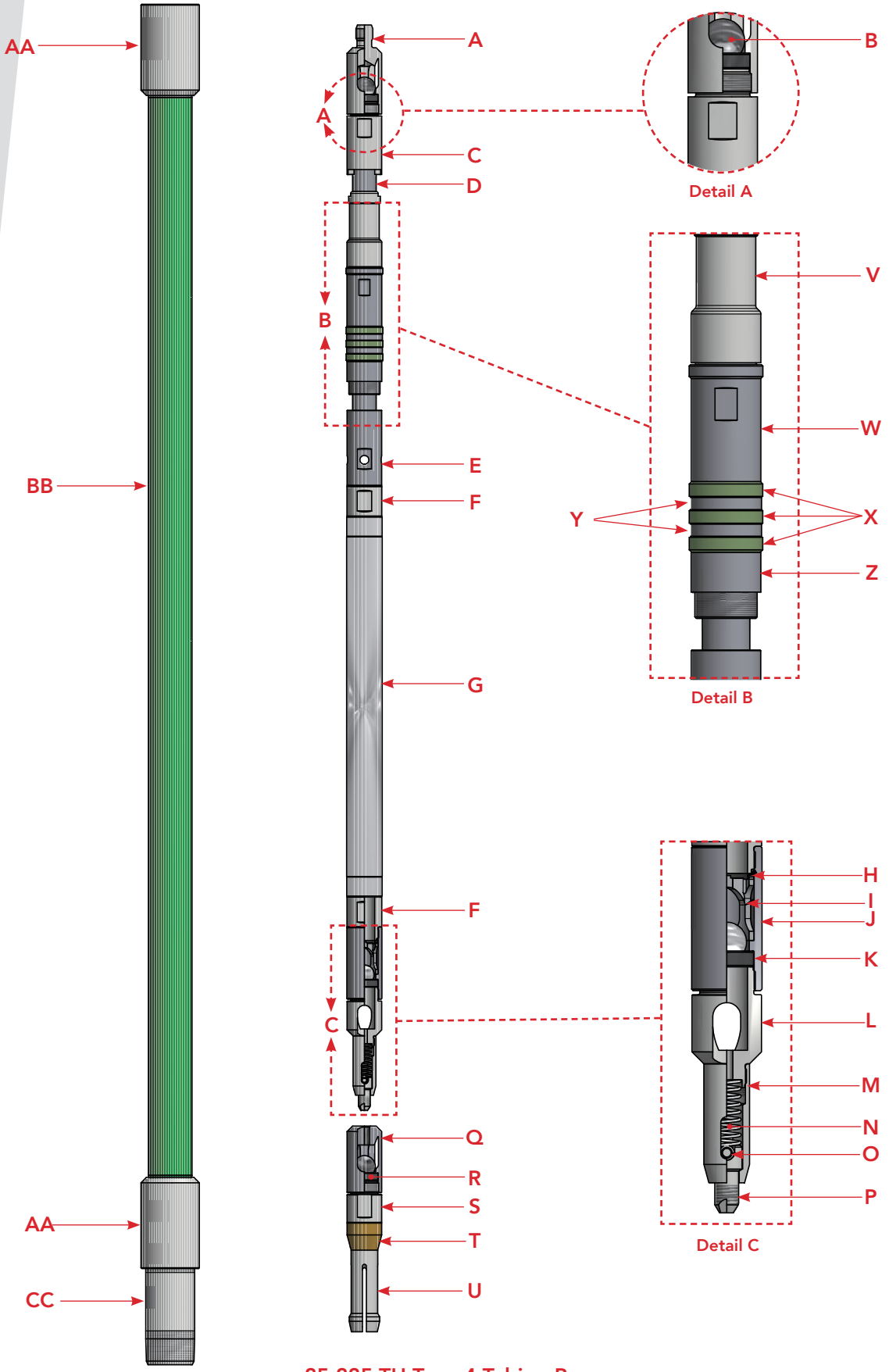

25-225 TH Type 4 Tubing Pump

TYPE 5 RHAC - See diagram next page

The Type Five pull tube pump incorporates a travelling valve on top of the pull-tube and on the bottom of the plunger, with a perforated coupling between the pull-tube and the plunger. The top ball and seat work like a spool-check valve by keeping the hydrostatic head off the travelling valve on the down stroke. The seal at the guide is not positive and allows new fluid into the top of the pump. This helps prevent gas lock at the top of the stroke. On the down stroke the close fit between the guide and the pull-tube creates a small pressure drop above the plunger in the pump chamber. This reduces the pressure on the travelling valve and allows easier flow of the gaseous formation fluid into the plunger and increases the pump efficiency.

Item	Description	2-3/8" Tubing	2-7/8" Tubing		
	Pull Tube Size	15/16" x 5/8"	15/16" x 5/8"	1-1/8" x 13/16"	1-1/2" x 1-1/8"
	Travelling Assembly	1-1/4" RH	1-1/4" RH	1-1/2" RH	1-3/4" RH
A	Cage, Open, Top	0620-1700-24	0620-1700-24	0620-1700-24	0620-2200-24
B	Ball & Seat, API	0604-1718-16	0604-1718-16	0604-1718-16	0604-2222-16
C	Bushing, Pull Tube	0608-5012-20	0608-5012-20	0608-5015-20	0608-5020-20
D	Pull Tube[1]	0662-122X-XX	0662-122X-XX	0662-701X-XX	0662-201X-XX
E	Coupling, Ported	0628-1312-20	0628-1312-20	0628-1315-20	0628-1317-20
F	Plunger, Pin-End, SM[2]	0629-120X-XX	0629-120X-XX	0629-140X-XX	0629-170X-XX
G	Bushing, Insert Cage	0622-1234-20	0622-1234-20	0622-1534-20	0622-1734-20
H	Gasket	0698-0929-00	0698-0929-00	0698-0930-00	0698-0931-00
I	Insert	0622-1259-79	0622-1259-79	0622-1559-79	0622-1759-79
J	Shell, Insert Cage	0622-1273-20	0622-1273-20	0622-1573-20	0622-1773-20
K	Ball & Seat	0604-1211-16	0604-1211-16	0604-1514-16	0604-1716-16
L	Plug, Seat	0639-0512-10	0639-0512-10	0639-0515-10	0639-0517-10
	Standing Assembly				
M	Guide, Pull Tube	0699-8705-10	0658-2026-16	0658-2026-17	0658-2090-21
N (Hold-Down)	Mandrel	0699-8707-10	0658-2001-10	0658-2001-10	0699-8615-20
	Cups, Seating (3)	2231-2105-80	2231-0114-10	2231-0114-10	2231-8003-45
	Spacer (2)	0699-8608-20	0658-2004-10	0658-2004-10	0699-8616-10
	End Spacer	0699-8607-20	—	—	—
	Nut, Lock	0699-8605-20	0658-2005-10	0658-2005-10	0699-8617-10
	Bushing, Barrel	0699-8648-21	0658-2308-10	0658-2307-20	0699-8628-20
O	Coupling, Extension[3]	0628-0112-XX	0628-0112-XX	0628-0115-XX	0628-0117-XX
P	Barrel, Dura G-CH[4]	0612-1206-XX	0612-1206-XX	0612-1506-XX	0612-1706-XX
O	Coupling, Extension	0628-0112-XX	0628-0112-XX	0628-0115-XX	0628-0117-XX
Q	Connector, Insert	0622-1737-20	0622-1737-20	0622-2237-20	0622-2237-20
R	Gasket	0698-0931-00	0698-0931-00	0698-0933-00	0698-0933-00
S	Insert	0622-1759-79	0698-1759-79	0622-2259-79	0622-2259-79
T	Shell	0622-1773-20	0622-1773-20	0622-2273-20	0622-2273-20
U	Ball & Seat	0604-1716-16	0604-1716-16	0604-2220-16	0604-2220-16
V	Bushing, Seat, Cage	0608-0310-10	0608-0321-10	0608-0320-10	0608-0320-10

1 - X's represent pull tube length in inches.
2 - X-XX represents length in feet (first X) and plunger fit (XX). Example 0629-1203-47 is a 3ft with -.003" fit.
3 - XX represents the extension length in inches.
4 - XX represents the barrel length in feet. Contact plant for barrel length availability.

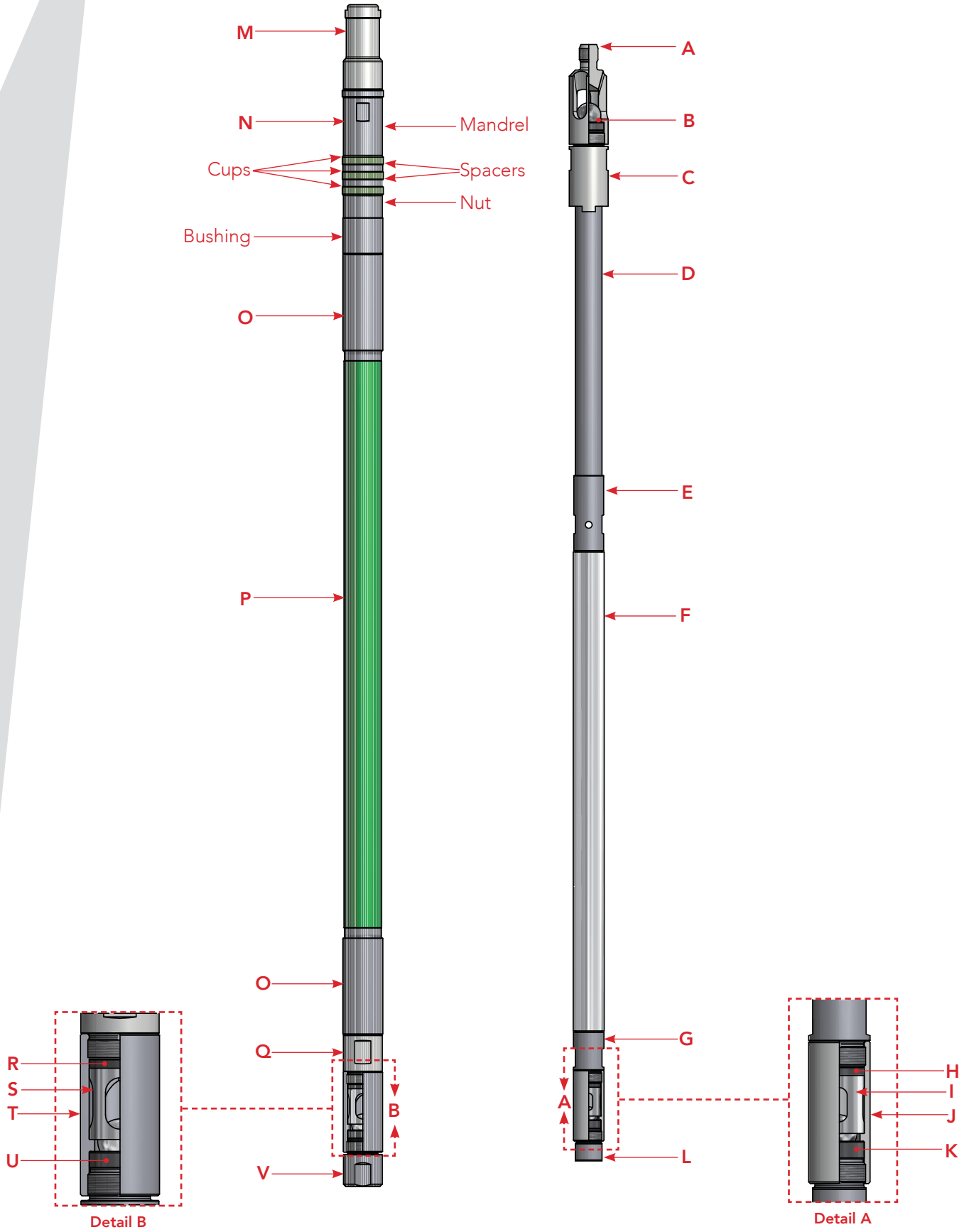

Type 5 Pull Tube Pump, RHAC

TYPE 5 RWAC, 2-3/8" TUBING - See diagram next page

Item	Description	2-3/8" Tubing	
	Pull Tube Size	15/16" x 5/8"	1-1/8" x 13/16"
	Travelling Assembly	1-1/4" RW	1-1/2" RW
A	Cage, Open, Top	0620-1700-24	0620-1700-24
B	Ball & Seat, API	0604-1718-16	0604-1718-16
C	Bushing, Pull Tube	0608-5012-20	0608-5015-20
D	Pull Tube[1]	0662-122X-XX	0662-701X-XX
E	Coupling, Ported	0628-1312-20	0628-1315-20
F	Plunger, Pin-End, SM[2]	0629-120X-XX	0629-140X-XX
G	Bushing, Insert Cage	0622-1234-20	0622-1534-20
H	Gasket	0698-0929-00	0698-0930-00
I	Insert	0622-1259-79	0622-1559-79
J	Shell	0622-1273-20	0622-1573-20
K	Ball & Seat	0604-1211-16	0604-1514-16
L	Plug, Seat	0639-0512-10	0639-0515-10
	Standing Assembly		
M	Guide, Pull Tube	0699-8705-10	0699-8706-10
N (Hold-Down)	Mandrel	0699-8707-10	0699-8707-10
	Cups, Seating (3)	2231-2105-80	2231-2105-80
	Spacer (2)	0699-8608-20	0699-8608-20
	End Spacer	0699-8607-20	0699-8607-20
	Nut, Lock	0699-8605-20	0699-8605-20
	Bushing, Barrel	0699-8648-10	0699-8648-20
O	Barrel, Dura G-CH[3]	0610-1206-XX	0610-1506-XX
P	Connector, Insert Cage	0622-1737-22	0622-1737-20
Q	Gasket	0698-0931-00	0698-0931-00
R	Insert	0622-1759-79	0622-1759-79
S	Shell	0622-1773-20	0622-1773-20
T	Ball & Seat	0604-1716-16	0604-1716-16
U	Bushing, Seat, Cage	0608-0310-10	0608-0310-10

1 - X's represent pull tube length in inches.
2 - X-XX represents length in feet (first X) and plunger fit (XX). Example 0629-1203-47 is a 3ft with -.003" fit.
3 - XX represents the barrel length in feet. Contact plant for barrel length availability.

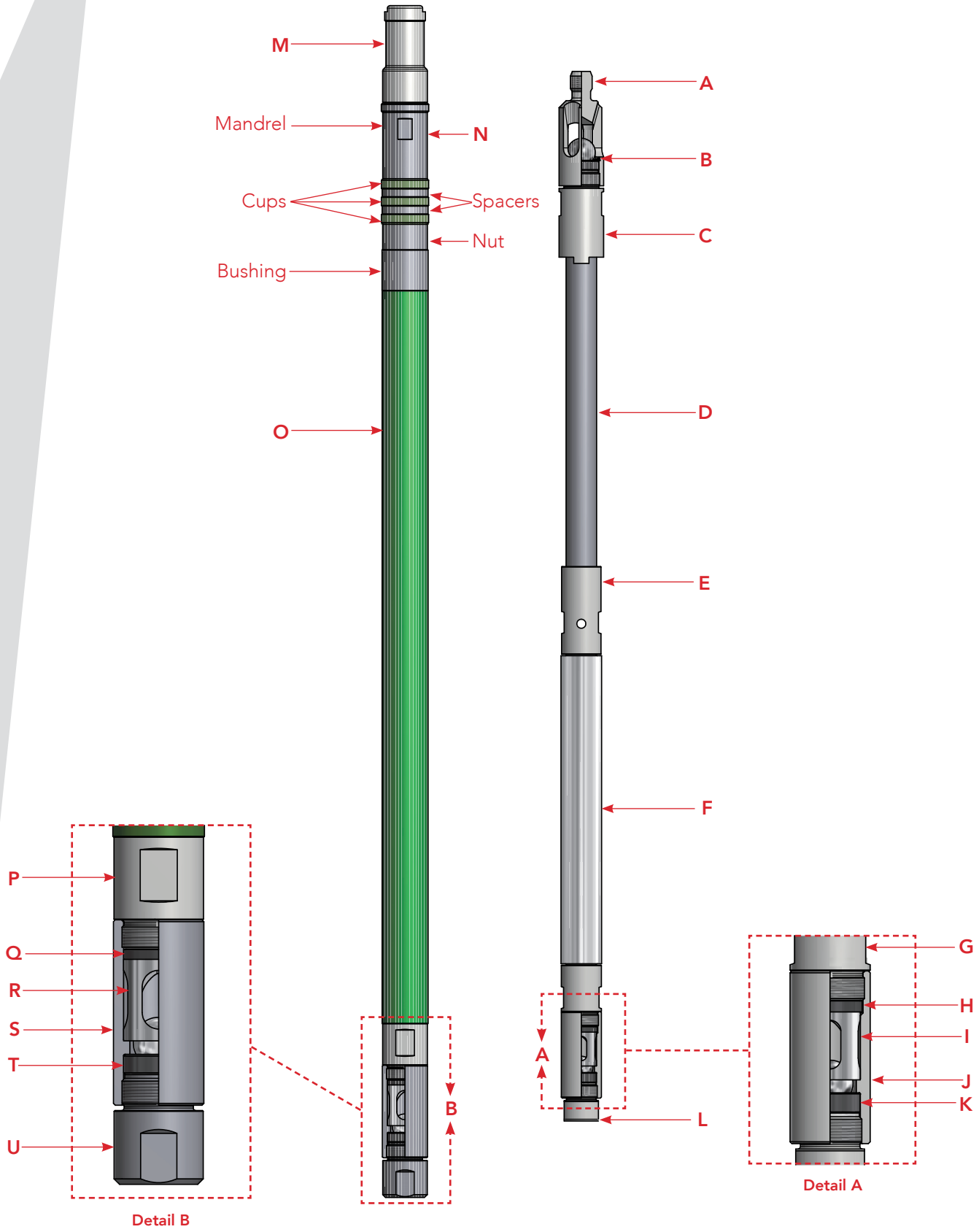

Type 5 Pull Tube Pump, RWAC, 2-3/8" Tubing

Dura Products
A DISTRIBUTIONNOW COMPANY

TYPE 5 RWAC, 2-7/8" TUBING - See diagram next page

Item	Description	2-7/8" Tubing		
	Pull Tube Size	15/16" x 5/8"	1-1/8" x 13/16"	1-1/2 x 1-1/8"
	Travelling Assembly	1-1/4" RW	1-1/2" RW	2" RW
A	Cage, Open, Top	0620-1700-24	0620-1700-24	0620-2200-24
B	Ball & Seat, API	0604-1718-16	0604-1718-16	0604-2222-16
C	Bushing, Pull Tube	0608-5012-20	0608-5015-20	0608-5020-20
D	Pull Tube[1]	0662-122X-XX	0662-701X-XX	0662-201X-XX
E	Coupling, Ported	0628-1312-20	0628-1315-20	0628-1320-20
F	Plunger, Pin-End, SM[2]	0629-120X-XX	0629-140X-XX	0629-190X-XX
G	Bushing, Insert Cage	0622-1234-20	0622-1534-20	0622-2034-20
H	Gasket	0698-0929-00	0698-0930-00	0698-0932-00
I	Insert	0622-1259-79	0622-1559-79	0622-2059-79
J	Shell	0622-1273-20	0622-1573-20	0622-2073-20
K	Ball & Seat	0604-1211-16	0604-1514-16	0604-2018-16
L	Plug, Seat	0639-0512-10	0639-0515-10	0639-0520-10
	Standing Assembly			
M	Guide, Pull Tube	0658-2026-16	0658-2026-17	0658-2090-21
N (Hold-Down)	Mandrel	0658-2001-10	0658-2001-10	0699-8615-20
	Cups, Seating (3)	2231-0114-10	2231-0114-10	2231-8003-45
	Spacer (2)	0658-2004-10	0658-2004-10	0699-8616-10
	Nut, Lock	0658-2005-10	0658-2005-10	0699-8617-10
	Bushing, Barrel	0658-2208-10	0658-2308-11	0699-8628-20
O	Barrel, Dura G-CH[3]	0610-1206-XX	0610-1506-XX	0610-2006-XX
P	Connector, Insert Cage	0622-1737-22	0622-1737-20	0622-2237-20
Q	Gasket	0698-0931-00	0698-0931-00	0698-0933-00
R	Insert	0622-1759-79	0698-1759-79	0622-2259-79
S	Shell	0622-1773-20	0622-1773-20	0622-2273-20
T	Ball & Seat	0604-1716-16	0604-1716-16	0604-2220-16
U	Bushing, Seat, Cage	0608-0321-10	0608-0321-10	0608-0320-10

1 - X's represent pull tube length in inches.
2 - X-XX represents length in feet (first X) and plunger fit (XX). Example 0629-1203-47 is a 3ft with -.003" fit.
3 - XX represents the barrel length in feet. Contact plant for barrel length availability.

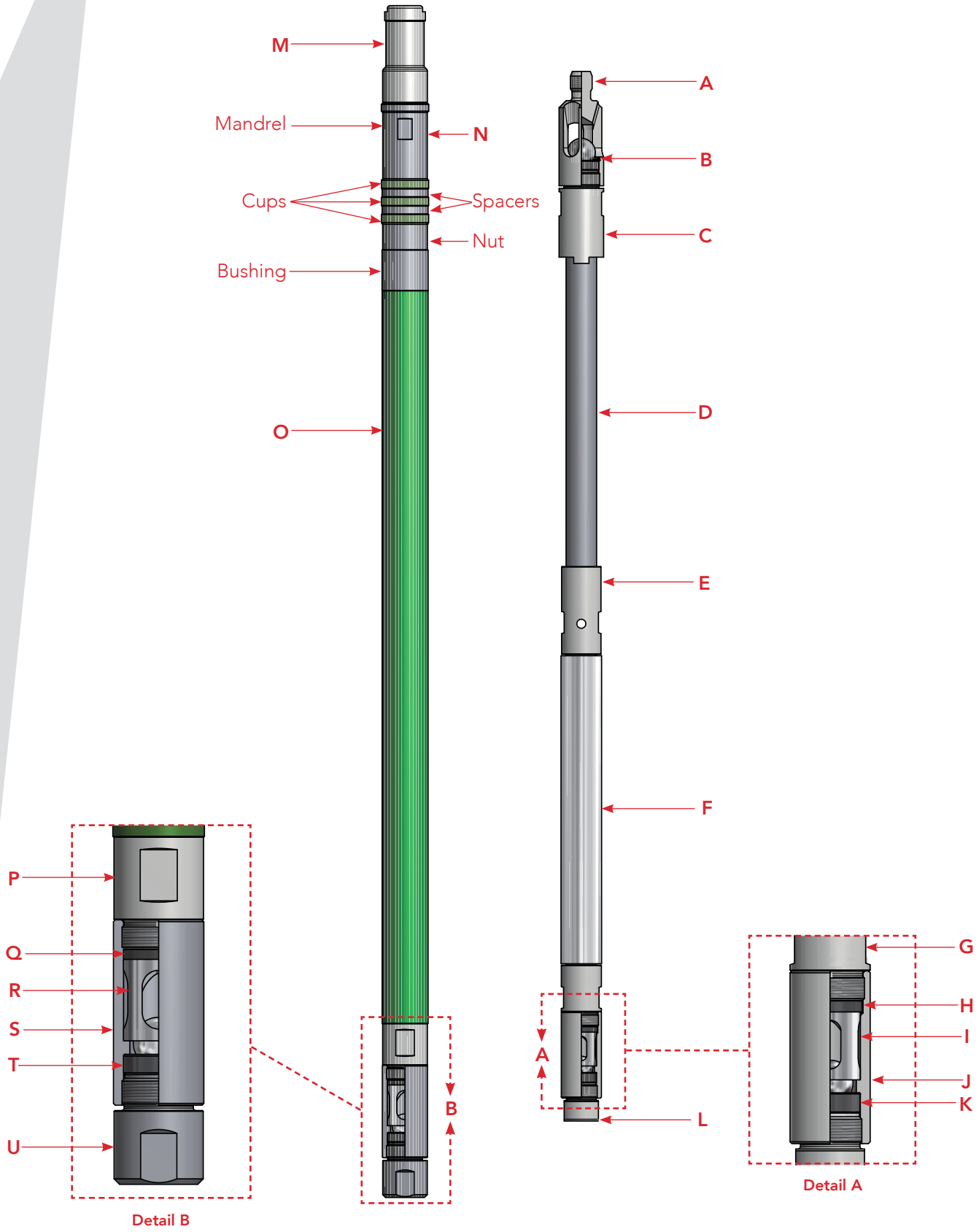

Type 5 Pull Tube Pump, RWAC, 2-7/8" Tubing

Dura Products
A DISTRIBUTION NOW COMPANY

TYPE 5 RWAC, 3-1/2" TUBING - See diagram next page

Item	Description	3-1/2" Tubing
	Pull Tube Size	1-1/2" x 1-1/8"
	Travelling Assembly	2-1/2" RW
A	Cage, Open, Top	0620-2700-25
B	Ball & Seat, API	0604-2727-16
C	Bushing, Pull Tube	0608-5025-21
D	Pull Tube[1]	0662-201X-XX
E	Coupling, Ported	0628-1325-20
F	Plunger, Box-End, SM[2]	0649-240X-XX
G	Connector, Insert Cage	0622-2536-X0
H	Gasket	0698-1041-00
I	Insert	0622-2759-79
J	Shell	0622-2573-20
K	Ball & Seat	0622-2724-16
L	Plug, Seat	0639-0525-10
	Standing Assembly	
M	Guide, Pull Tube	0658-3090-21
N (Hold-Down)	Mandrel	0658-3001-10
	Cups, Seating (3)	2231-0906-10
	Spacer (2)	0658-3004-10
	Nut, Lock	0658-3005-10
	Bushing, Barrel	0658-3708-10
O	Barrel, Dura G-CH[3]	0610-2506-XX
P	Connector, Insert Cage	0622-2737-20
Q	Gasket	0698-1041-00
R	Insert	0622-2759-79
S	Shell	0622-2773-20
T	Ball & Seat	0604-2724-16
U	Bushing, Seat, Cage	0608-0330-10

1 - X's represent pull tube length in inches.
2 - X-XX represents length in feet (first X) and plunger fit (XX). Example 0629-1203-47 is a 3ft with -.003" fit.
3 - XX represents the barrel length in feet. Contact plant for barrel length availability.

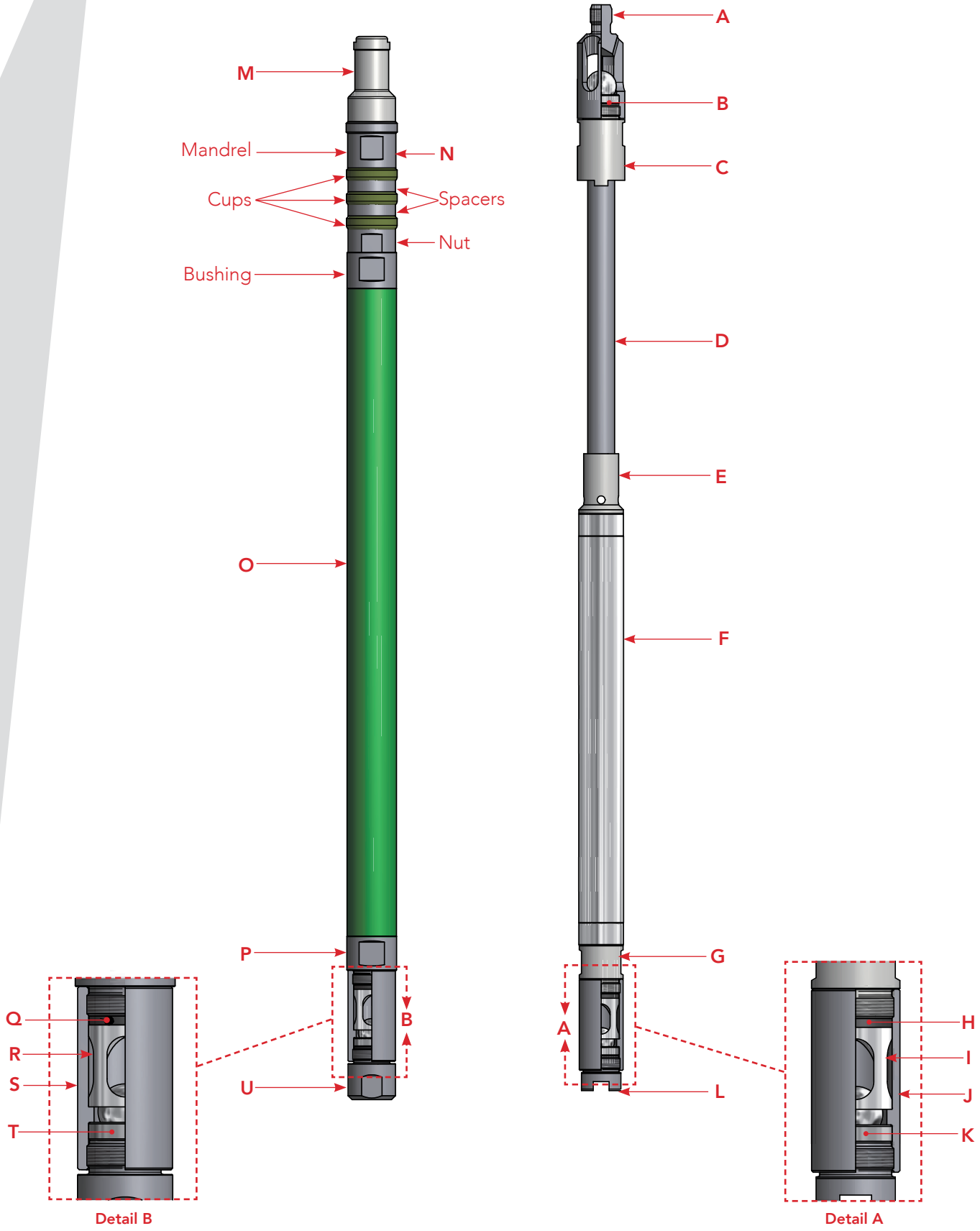

Type 5 Pull Tube Pump, RWAC, 3-1/2" Tubing

Dura Products
A DISTRIBUTION NOW COMPANY

TYPE 5 RHBC - See diagram next page

Item	Description	2-3/8" Tubing	2-7/8" Tubing		
	Pull Tube Size	15/16" x 5/8"	15/16" x 5/8"	1-1/8" x 13/16"	1-1-2" x 1-1/8"
	Travelling Assembly	1-1/4" RH	1-1/4" RH	1-1/2" RH	1-3/4" RH
A	Cage, Open, Top	0620-1700-24	0620-1700-24	0620-1700-24	0620-2200-24
B	Ball & Seat, API	0604-1718-16	0604-1718-16	0604-1718-16	0604-2222-16
C	Bushing, Pull Tube	0608-5012-20	0608-5012-20	0608-5015-20	0608-5020-20
D	Pull Tube[1]	0662-122X-XX	0662-122X-XX	0662-701X-XX	0662-201X-XX
E	Coupling, Ported	0628-1312-20	0628-1312-20	0628-1315-20	0628-1317-20
F	Plunger, Pin-End, SM[2]	0629-120X-XX	0629-120X-XX	0629-140X-XX	0629-170X-XX
G	Bushing, Insert Cage	0622-1234-20	0622-1234-20	0622-1534-20	0622-1734-20
H	Gasket	0698-0929-00	0698-0929-00	0698-0930-00	0698-0931-00
I	Insert	0622-1259-79	0622-1259-79	0622-1559-79	0622-1759-79
J	Shell, Insert Cage	0622-1273-20	0622-1273-20	0622-1573-20	0622-1773-20
K	Ball & Seat	0604-1211-16	0604-1211-16	0604-1514-16	0604-1716-16
L	Plug, Seat	0639-0512-10	0639-0512-10	0639-0515-10	0639-0517-10
	Standing Assembly				
M	Guide, Pull Tube	0658-1091-21	0658-1091-21	0658-1091-20	0658-2090-20
–	Guide Ring	–	0699-8652-20	–	–
N	Coupling, Extension[3]	0628-0112-XX	0628-0112-XX	0628-0115-XX	0628-0117-XX
O	Barrel, Dura G-CH[4]	0612-1206-XX	0612-1206-XX	0612-1506-XX	0612-1706-XX
N	Coupling, Extension	0628-0112-XX	0628-0112-XX	0628-0115-XX	0628-0117-XX
P	Connector, Insert	0622-1737-20	0622-1737-20	0622-2237-20	0622-2237-20
Q	Gasket	0698-0931-00	0698-0931-00	0698-0933-00	0698-0933-00
R	Insert	0622-1759-79	0698-1759-79	0622-2259-79	0622-2259-79
S	Shell	0622-1773-20	0622-1773-20	0622-2273-20	0622-2273-20
T	Ball & Seat	0604-1716-16	0604-1716-16	0604-2220-16	0604-2220-16
–	Adapter	–	0658-2121-20	–	–
U (Hold-Down)	Mandrel	0658-1001-10	0658-2001-10	0658-2001-10	0658-2001-10
	Cups, Seating (3)	2231-0110-80	2231-0114-10	2231-0114-10	2231-0114-10
	Spacer (2)	0658-1004-10	0658-2004-10	0658-2004-10	0658-2004-10
	Nut, Lock	0658-1005-10	0658-2005-10	0658-2005-10	0658-2005-10
	Tapered Coupling	0658-1006-10	0658-2006-10	0658-2006-10	0658-2006-10

1 - X's represent pull tube length in inches.
2 - X-XX represents length in feet (first X) and plunger fit (XX). Example 0629-1203-47 is a 3 ft. with -.003" fit.
3 - XX represents the extension length in inches.
4 - XX represents the barrel length in feet. Contact plant for barrel length availability.

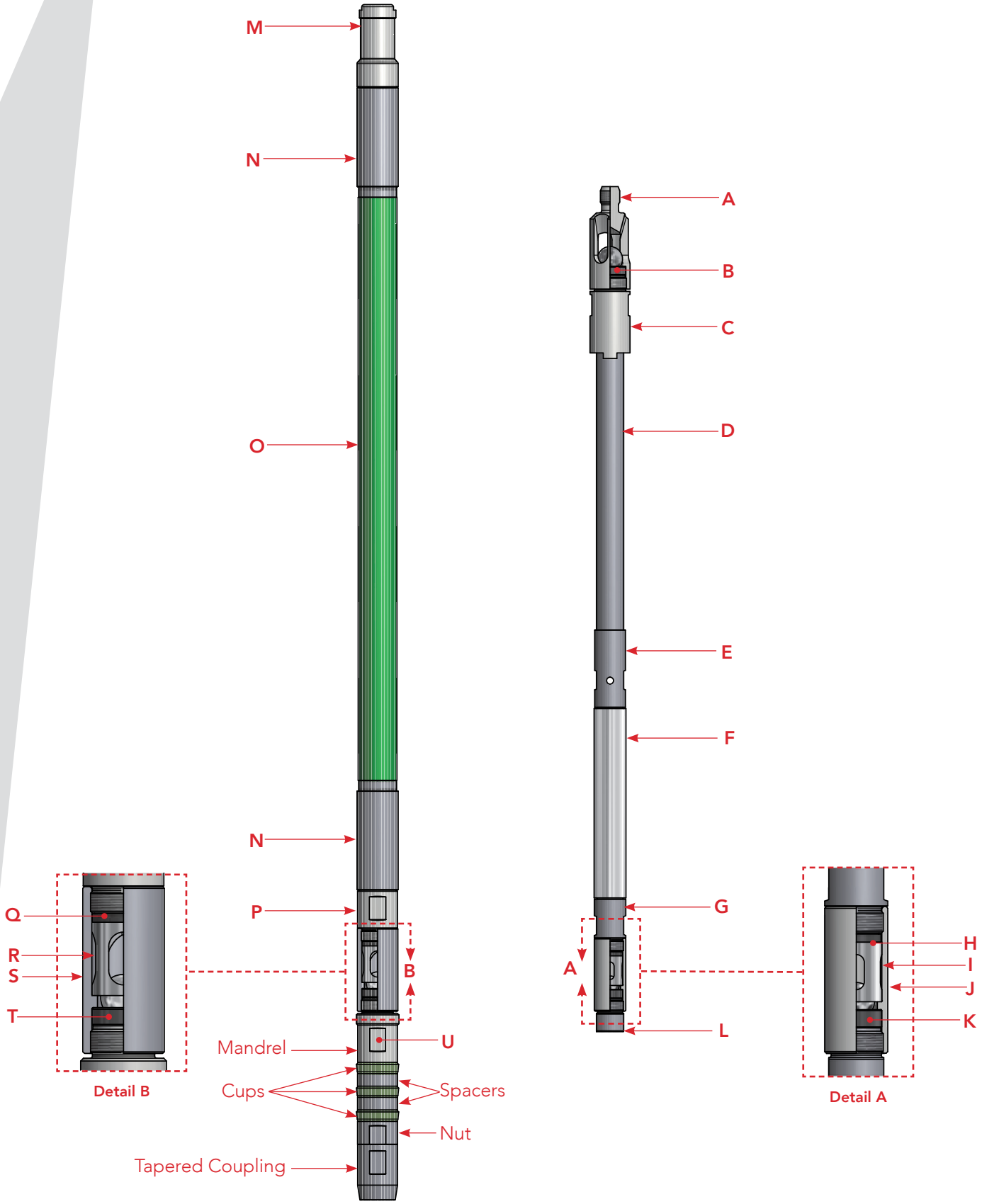

Type 5 Pull Tube Pump, RHBC

Dura Products
A DISTRIBUTIONNOW COMPANY

TYPE 5 RWBC, 2-3/8" TUBING - See diagram next page

Item	Description	2-3/8" Tubing	
	Pull Tube Size	15/16" x 5/8"	1-1/8" x 13/16"
	Travelling Assembly	1-1/4" RW	1-1/2" RW
A	Cage, Open, Top	0620-1700-24	0620-1700-24
B	Ball & Seat, API	0604-1718-16	0604-1718-16
C	Bushing, Pull Tube	0608-5012-20	0608-5015-20
D	Pull Tube[1]	0662-122X-XX	0662-701X-XX
E	Coupling, Ported	0628-1312-20	0628-1315-20
F	Plunger, Pin-End, SM[2]	0629-120X-XX	0629-140X-XX
G	Bushing, Insert Cage	0622-1234-20	0622-1534-20
H	Gasket	0698-0929-00	0698-0930-00
I	Insert	0622-1259-79	0622-1559-79
J	Shell	0622-1273-20	0622-1573-20
K	Ball & Seat	0604-1211-16	0604-1514-16
L	Plug, Seat	0639-0512-10	0639-0515-10
	Standing Assembly		
M	Guide, Pull Tube	0658-1090-21	0658-1090-20
N	Barrel, Dura G-CH[3]	0610-1206-XX	0610-1506-XX
O	Connector, Insert Cage	0622-1737-22	0622-1737-20
P	Gasket	0698-0931-00	0698-0931-00
Q	Insert	0622-1759-79	0622-1759-79
R	Shell	0622-1773-20	0622-1773-20
S	Ball & Seat	0604-1716-16	0604-1716-16
T (Hold-Down)	Mandrel	0658-1001-10	0658-1001-10
	Cups, Seating (3)	2231-0110-80	2231-0110-80
	Spacer (2)	0658-1004-10	0658-1004-10
	Nut, Lock	0658-1005-10	0658-1005-10
	Tapered Coupling	0658-1006-10	0658-1006-10

1 - X's represent pull tube length in inches.
2 - X-XX represents length in feet (first X) and plunger fit (XX). Example 0629-1203-47 is a 3ft with -.003" fit.
3 - XX represents the barrel length in feet. Contact plant for barrel length availability.

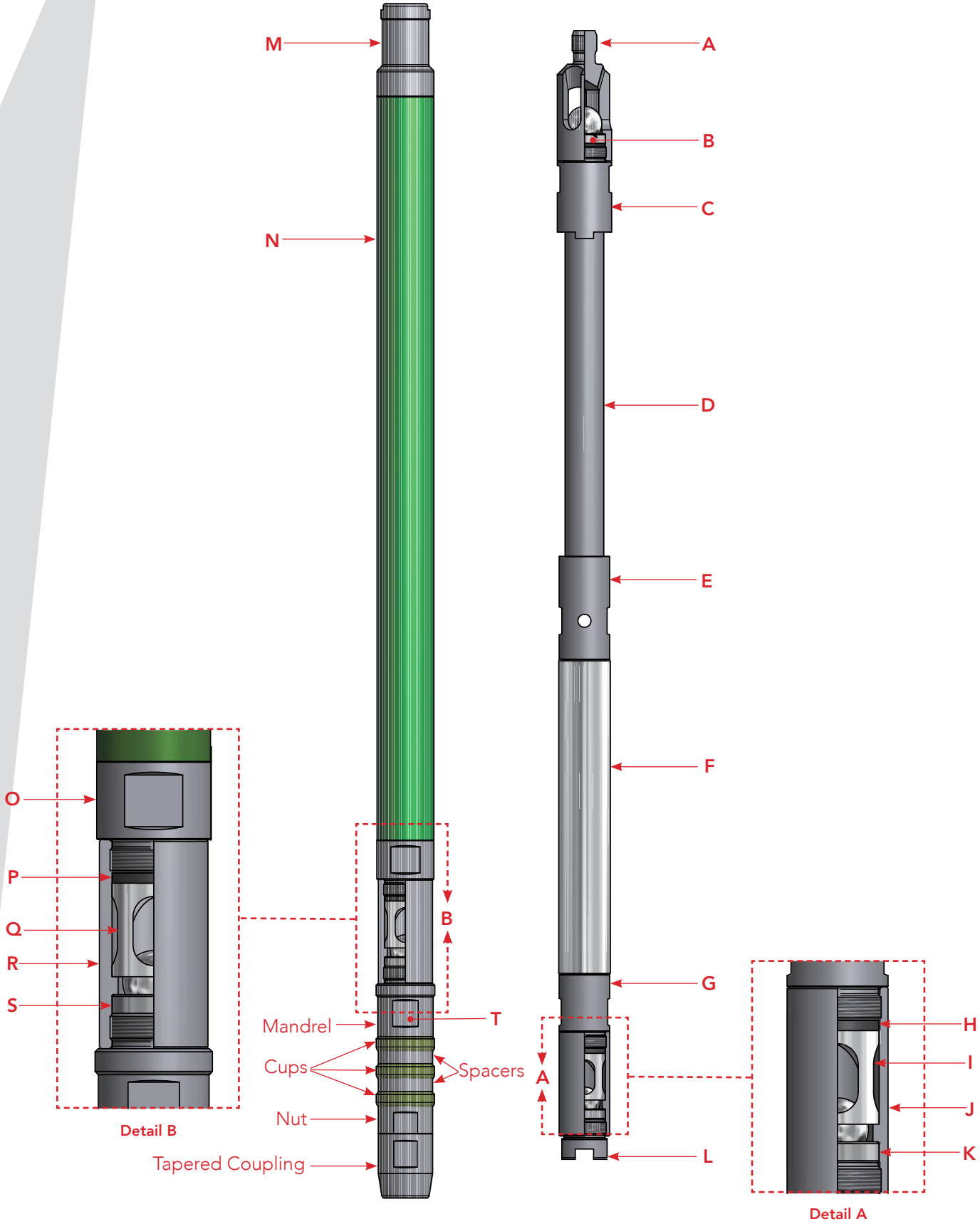

Type 5 Pull Tube Pump, RWBC, 2-3/8" Tubing

Dura Products
A DISTRIBUTIONNOW COMPANY

TYPE 5 RWBC, 2-7/8" TUBING - See diagram next page

Item	Description	2-7/8" Tubing	
	Pull Tube Size	1-1/8" x 13/16"	1-1/2" x 1-1/8"
	Travelling Assembly	1-1/2" RW	2" RW
A	Cage, Open, Top	0620-1700-24	0620-2200-24
B	Ball & Seat, API	0604-1718-16	0604-2222-16
C	Bushing, Pull Tube	0608-5015-20	0608-5020-20
D	Pull Tube[1]	0662-701X-XX	0662-201X-XX
E	Coupling, Ported	0628-1315-20	0628-1320-20
F	Plunger, Pin-End, SM[2]	0629-140X-XX	0629-190X-XX
G	Bushing, Insert Cage	0622-1534-20	0622-2034-20
H	Gasket	0698-0930-00	0698-0932-00
I	Insert	0622-1559-79	0622-2059-79
J	Shell	0622-1573-20	0622-2073-20
K	Ball & Seat	0604-1514-16	0604-2018-16
L	Plug, Seat	0639-0515-10	0639-0520-10
	Standing Assembly		
M	Guide, Pull Tube	0658-1090-20	0658-2090-20
–	Guide Ring	0699-8652-20	–
N	Barrel, Dura G-CH[3]	0610-1506-XX	0610-2006-XX
O	Connector, Inset Cage	0622-1737-20	0622-2237-20
P	Gasket	0698-0931-00	0698-0933-00
Q	Insert	0698-1759-79	0622-2259-79
R	Shell	0622-1773-20	0622-2273-20
S	Ball & Seat	0604-1716-16	0622-2220-16
–	Adapter	0658-2121-20	–
T (Hold-Down)	Mandrel	0658-2001-10	0658-2001-10
	Cups, Seating (3)	2231-0114-10	2231-0114-10
	Spacer (2)	0658-2004-10	0658-2004-10
	Nut, Lock	0658-2005-10	0658-2005-10
	Tapered Coupling	0658-2006-10	0658-2006-10

1 - X's represent pull tube length in inches.
2 - X-XX represents length in feet (first X) and plunger fit (XX). Example 0629-1403-97 is a 3ft with -.003" fit.
3 - XX represents the barrel length in feet. Contact plant for barrel length availability.

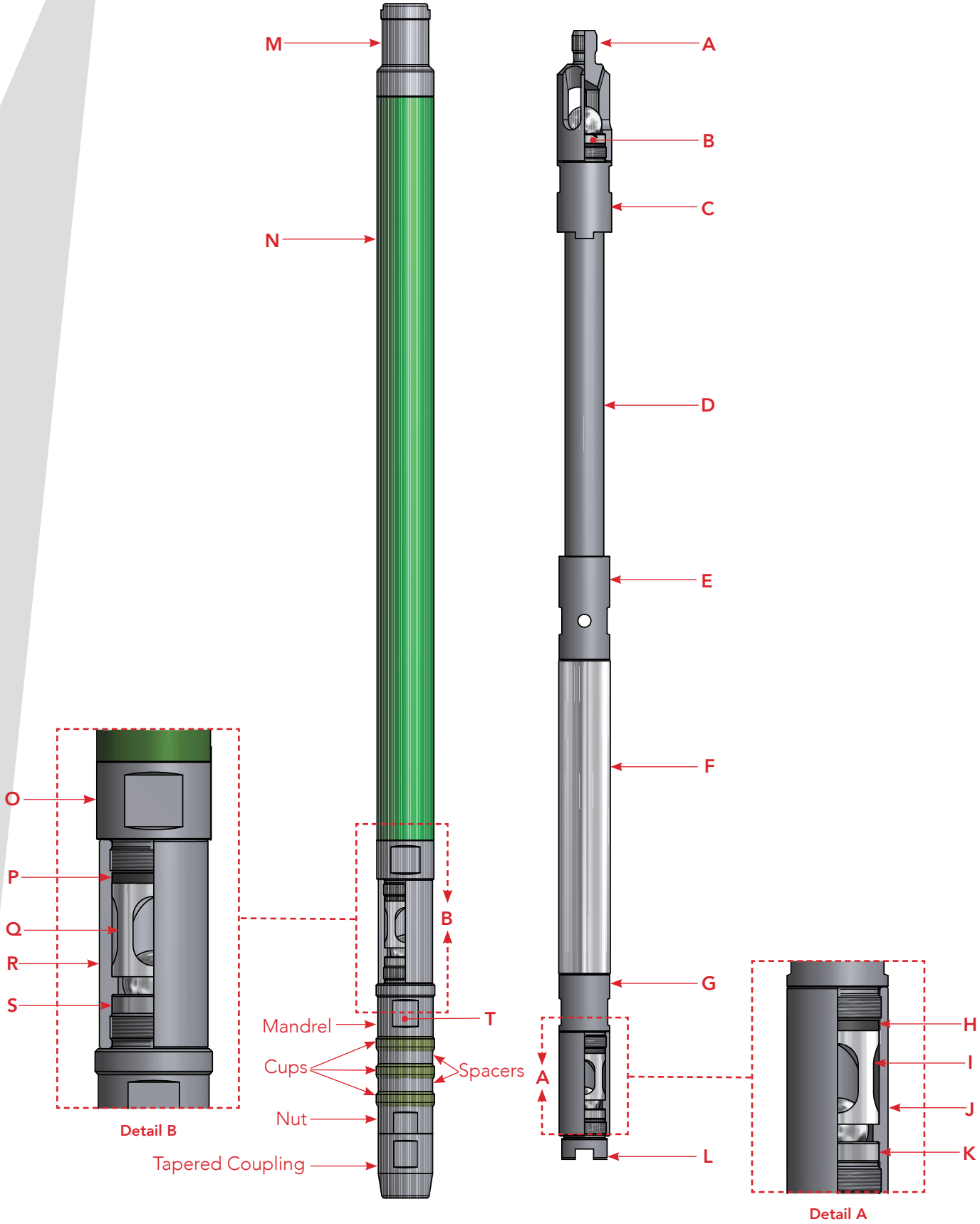

Type 5 Pull Tube Pump, RWBC, 2-7/8" Tubing

Dura Products
A DISTRIBUTIONNOW COMPANY

TYPE 5 RWBC, 3-1/2" TUBING - See diagram next page

Item	Description	3-1/2" Tubing
	Pull Tube Size	1-7/8" x 1-3/8"
	Travelling Assembly	2-1/2" RW
A	Cage, Open, Top	0620-2700-25
B	Ball & Seat, API	0604-2727-16
C	Bushing, Pull Tube	0608-5025-20
D	Pull Tube[1]	0662-251X-XX
E	Coupling, Ported	0628-1325-21
F	Plunger, Pin-End, SM[2]	0629-240X-XX
G	Bushing, Insert Cage	0622-2534-20
H	Gasket	0698-1041-00
I	Insert	0622-2759-79
J	Shell	0622-2573-20
K	Ball & Seat	0604-2724-16
L	Plug, Seat	0639-0525-10
	Standing Assembly	
M	Guide, Pull Tube	0658-3090-20
N	Barrel, Dura G-CH[3]	0610-2506-XX
O	Connector, Inset Cage	0622-2737-20
P	Gasket	0698-1041-00
Q	Insert	0622-2759-79
R	Shell	0622-2773-20
S	Ball & Seat	0622-2724-16
T (Hold-Down)	Mandrel	0658-3001-10
	Cups, Seating (3)	2231-0906-10
	Spacer (2)	0658-3004-10
	Nut, Lock	0658-3005-10
	Tapered Coupling	0658-3006-10

1 - X's represent pull tube length in inches.
2 - X-XX represents length in feet (first X) and plunger fit (XX). Example 0629-2403-97 is a 3ft with -.003" fit.
3 - XX represents the barrel length in feet. Contact plant for barrel length availability.

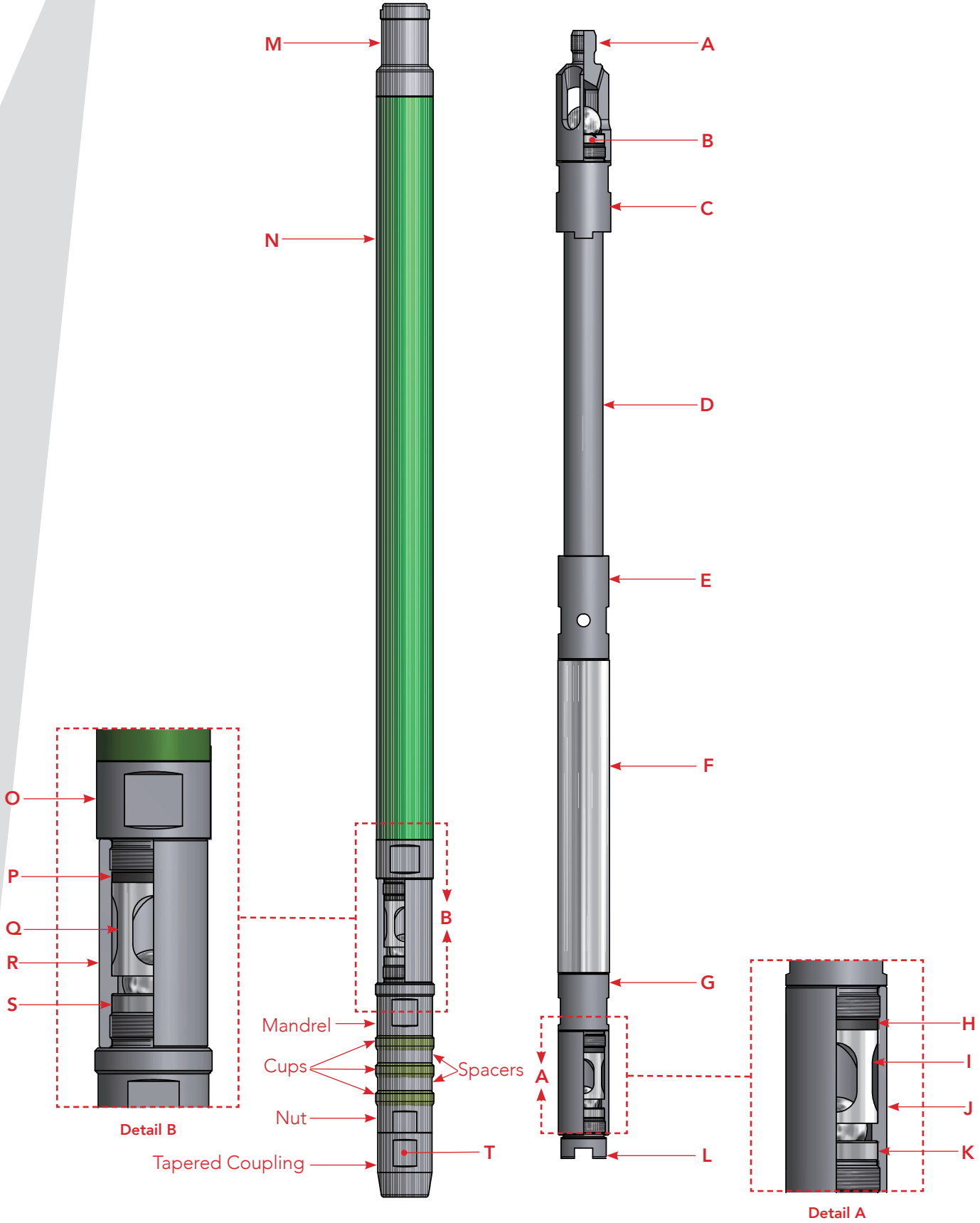

Type 5 Pull Tube Pump, RWBC, 3-1/2" Tubing

TYPE 6 OVERSIZED TUBING PUMP, TH STYLE - See diagram next page

	Tubing	2.875 - 6.50 lbs/ft	3.500 - 9.30 lbs/ft
	Pump Bore	2.25	2.75
	Pull Tube O.D.	1.50	1.88
	Max O.D.	3.72	4.18
	Max O.D. Item(s)	T	N
	Top Connection	2.875 EUE Box	3.500 EUE Box
	Bottom Connection	2.875 EUE Pin	2.875 EUE Pin
	Travelling Assembly		
A	**Cage, Open, Top**	0620-2200-24	0620-2700-25
B	**Ball & Seat**	0604-2222-16	0604-2727-16
C	**Bushing, Pull Tube**	0608-5020-20	0608-5025-20
D	**Pull Tube[1]**	0662-201X-XX	0662-251X-XX
E	**Coupling, Ported**	0628-1322-20	0628-1327-20
F	**Connector, Insert Cage**	0622-2234-21	0622-2735-20
G	**Plunger, Box-End, SM[2]**	0649-220X-XX	0649-270X-XX
H	**Connector, Insert Cage**	0622-2234-21	0622-2735-20
I	**Gasket, Insert Cage**	0698-0933-00	0698-1041-00
J	**Insert Cage**	0622-2259-79	0622-2759-79
K	**Shell, Insert Cage**	0622-2273-20	0622-2773-20
L	**Ball & Seat**	0604-2220-16	0604-2724-16
M	**Plug, Seat**	0639-0522-11	0639-0525-10
	Standing Assembly		
N	**Upper Barrel Fitting**	0628-3222-20	0628-3227-21
O	**Barrel, Dura G-CH[3]**	0612-2204-XX	0612-2704-XX
P	**Clutch Ring**	0699-8720-11	0699-8700-11
Q	**Lower Barrel Bushing**	0699-8720-10	0699-8700-10
R	**Gasket, Insert Cage**	0698-1041-07	0698-1041-07
S	**Insert Cage**	0622-3759-79	0622-3759-79
T	**Shell, Insert Cage**	0622-3766-20	0622-3766-20
U	**Ball & Seat**	0604-3732-16	0604-3732-16
V	**Lock Nut**	0638-3799-01	0638-3799-01
W	**Seat Plug**	0626-3799-41	0626-3799-41

1 - X's represent pull tube length in inches.
2 - X-XX represents length in feet (first X) and plunger fit (XX). Example 0629-2203-47 is a 3ft with -.003" fit.
3 - XX represents the barrel length in feet. Contact plant for barrel length availability.

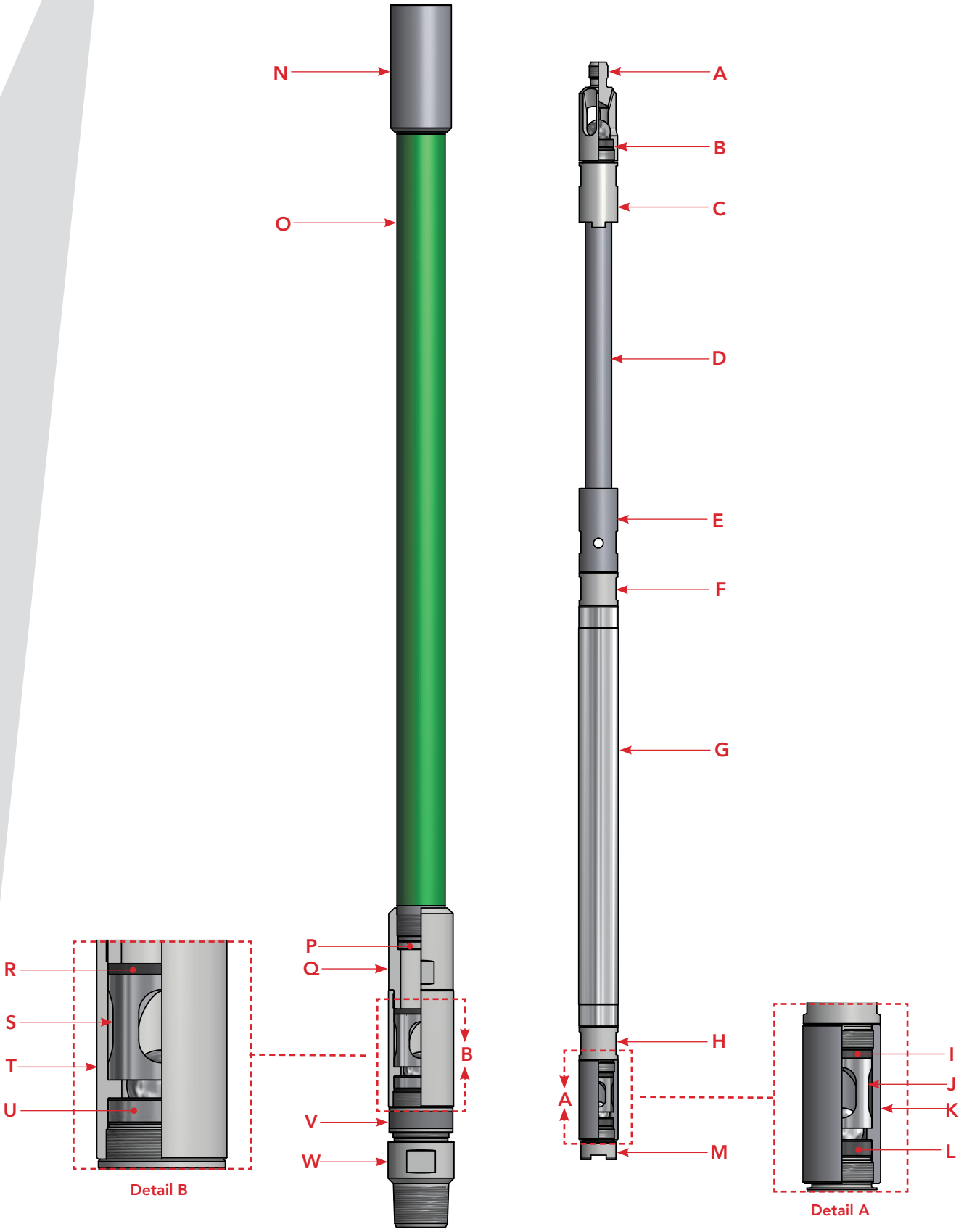

Type 6 Pull Tube Oversized Tubing Pump, TH Style

Dura Products
A DISTRIBUTION NOW COMPANY

TYPE 6 OVERSIZED TUBING PUMP, RX STYLE - See diagram next page

	Type	RX	RX
	Tubing	3.500 - 9.30 lbs/ft	3.500 - 9.30 lbs/ft
	Pump Bore	3.25	3.75
	Pull Tube O.D.	2.38	2.38
	Max O.D.	4.180	4.250
	Max O.D. Item(s)	Tubing Coupling 3.500 9.30 lbs/ft SC	N,O
	Top Connection	3.500 EUE Pin	3.500 EUE Pin
	Bottom Connection	2.875 EUE Pin	2.875 EUE Pin
	Travelling Assembly		
A	**Cage, Open, Top**	0620-2700-25	0620-2700-25
B	**Ball & Seat**	0604-2727-16	0604-2727-16
C	**Bushing, Pull Tube**	0608-5032-25	0608-5032-25
D	**Pull Tube[1]**	0662-321X-XX	0662-321X-XX
E	**Coupling, Ported**	0628-1332-20	0628-1337-20
F	**Connector, Insert Cage**	0622-3235-20	0626-3701-02
G	**Plunger, Box-End, SM[2]**	0649-320X-XX	0649-370X-XX
H	**Connector, Insert Cage**	0622-3235-20	0626-3706-02
I	**Gasket, Insert Cage**	0698-1041-06	0698-1041-07
J	**Insert Cage**	0622-3259-79	0622-3759-79
K	**Shell, Insert Cage**	0622-3273-20	0622-3766-20
L	**Ball & Seat**	0604-3230-16	0604-3732-16
M	**Plug, Seat**	0638-3298-01	0638-3798-01
	Standing Assembly		
N	**Upper Barrel Fitting**	0628-3232-20	0628-3237-20
O	**Barrel, Dura G-CH[3]**	0612-3254-XX	0612-3759-XX
P	**Lower Barrel Fitting**	0626-3227-20	0622-3737-20
Q	**Gasket, Insert Cage**	0698-1041-07	0698-1041-07
R	**Insert Cage**	0622-3759-79	0622-3759-79
S	**Cage, Standing**	0622-3766-20	0622-3773-20
T	**Ball & Seat**	0604-3732-16	0604-3732-16
U	**Lock Nut**	0638-3799-01	0638-3799-01
V	**Seat Plug**	0626-3799-41	0626-3799-41

1 - X's represent pull tube length in inches.
2 - X-XX represents length in feet (first X) and plunger fit (XX). Example 0629-3203-47 is a 3ft with -.003" fit.
3 - XX represents the barrel length in feet. Contact plant for barrel length availability.

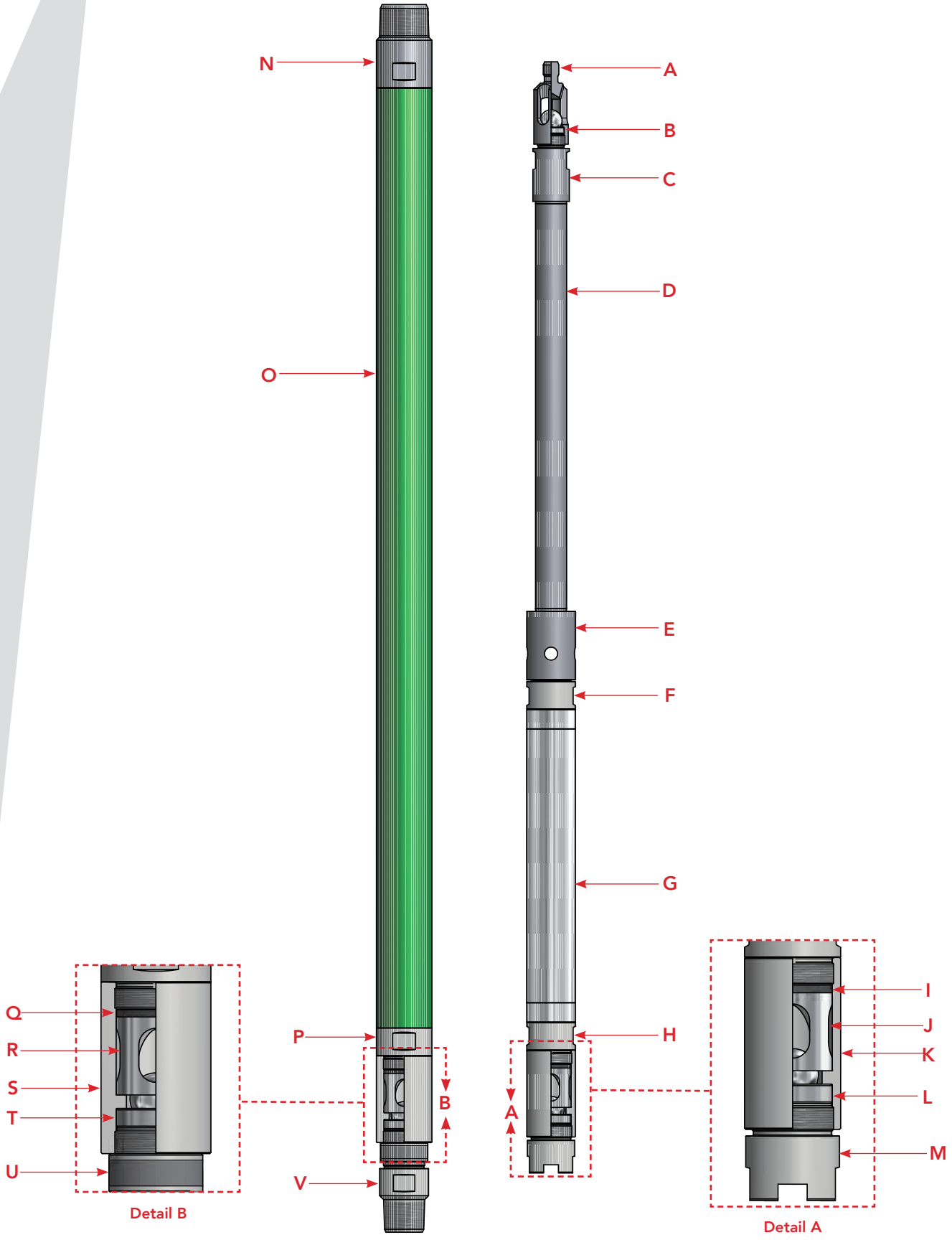

Type 6 Pull Tube Oversized Tubing Pump, RX Style

DUPLEX PUMPS

DESIGNED FOR HANDLING LARGE FLUID VOLUMES - Dura Duplex pumps provide an efficient and economical method of pumping wells that have a strong water drive or where waterflooding operations have necessitated the handling of larger volumes of fluid to get the desired production. Further economy is obtained over tubing pumps, in that tubing does not have to be pulled to install or repair a Dura Products Duplex pump.

The greater capacity of Dura Products Duplex pumps makes it possible to produce the same fluid volume at: (1) a slower pumping speed to provide longer life on all equipment, (2) shorter stroke length to increase the service life of sucker rods and decrease gear wear of pumping unit.

Waterflooding makes it imperative that larger volumes of fluid be pumped to maintain production schedules. Dura Products Duplex pumps give you tubing pump volume without sacrificing the lower operational cost of a rod pump. Corrosion resistant materials are available to resist the oxygen corrosion often intensified by waterflooding.

Fifty percent of fluid is discharged from pump on upstroke and fifty percent is produced on the downstroke. This reduces fluid friction through the pump and keeps fluid moving up the tubing at all times. This keeps sand from settling and prevents corrosive fluids from becoming dormant, where they have time to corrode pump parts. Being of stationary barrel design, there is no interference between the tubing ID and pump. This reduces sucker rod buckling to a minimum and provides greater plunger travel for higher pump efficiency with reduced wear on moving pump parts.

Dura Products™
A DISTRIBUTIONNOW™ COMPANY

Dura Products
A DISTRIBUTION NOW COMPANY

20-150-RWBC - See diagram next page

Item	Description	# Req'd	Part Number
	Travelling Assembly		2-3/8" x 1-1/2"
A	Bushing, Valve Rod With 3/4" S.R. Pin	1	0608-0120-24
B	Valve Rod For 16' Pump With 5' Plungers	1	0656-0921-27
	Valve Rod For 20' Pump With 5' Plungers		0656-0921-75
	Valve Rod For 24' Pump With 5' Plungers		0656-0922-23
C	Bushing, Cage, Top Plunger	1	0628-4715-34
D	Gasket, Insert Cage	1	0698-0930-00
E	Cobalt Insert, Insert Cage	1	0622-1559-79
F	Shell, Insert Cage	1	0622-1573-30
G	Ball & Seat	1	0604-1514-16
H	Plunger, Spray Metal, 1-1/2", 5' Long	2	0629-1405-XX
I	Coupling, Perforated	1	0628-1111-30
J	Plunger, Connecting, For 16' Pump w/5' Plunger	1	0635-1161-68
	Plunger, Connecting, For 20' Pump w/5' Plunger		0635-1162-16
	Plunger, Connecting, For 24' Pump w/5' Plunger		0635-1162-64
K	Coupling	1	0628-1211-30
	Standing Assembly		
L	Guide, Valve Rod	1	0658-1026-30
M	Connector, Guide to Barrel	1	0626-1501-12
N	Barrel, Dura G-CH, 1-1/2", 16' Long	2	0610-1506-16
	Barrel, Dura G-CH, 1-1/2", 20' Long		0610-1506-20
	Barrel, Dura G-CH, 1-1/2", 24' Long		0610-1506-24
O	Connector, Barrel to Jacket	1	0626-1218-31
P	Jacket, Liner, 38" Long	1	0630-1011-03
Q	Liner, 36" Long	1	0632-1111-36
R	Connector, Perforated	1	0626-1125-31
S	Connector, Barrel to Insert Cage	1	0622-2037-30
T	Gasket, Stainless Steel	1	0698-0932-31
U	Cobalt Insert, Insert Cage	1	0622-2059-79
V	Shell, Insert Cage	1	0622-2073-32
W	Ball & Seat	1	0604-2018-16
X	Hold-Down, 3 Wedge, 3 Cup Complete*	1	0658-1057-01
	Seating Nipple, 2-3/8", For Above Hold-Down		0636-1210-12

*See Section H for Hold-Down information.

Item Description	Pump Size
	2-3/8" x 1-1/2"
Production Increase	50% Over 2-3/8" x 1-1/2"
Plunger Constant	0.393
S.R. Pin Connection	1-1/16" or 3/4 S.R. Pin
Fishing Neck O.D.	1-1/2"
Barrel O.D.	1.750"
Barrel Thread	1.5730" - 16 INT
Hold-Down (Special)	See Hold-Down Section
Hold-Down NO-GO	1.895"
Seating Cup O.D.	1.810"
Travelling Valve	1-1/2"
Standing Valve	2" (1.865 O.D.)
Gas Anchor Connection	1-1/4" – 11-1/2 LP

Pitch Length of Plunger -
Nominal Length of Plunger Plus 3"

Barrel Length	Plunger Length	Connecting Plunger Length	Valve Rod Length	Maximum Stroke
16'	5'	168"	127"	114"
20'	5'	216"	175"	162"
24'	5'	264"	223"	211"

Plunger Fit Required	1-1/2" O.D.
Base Minus .001"	99
Base Minus .002"	98
Base Minus .003"	97
Base Minus .005"	95
Base Minus .007"	93

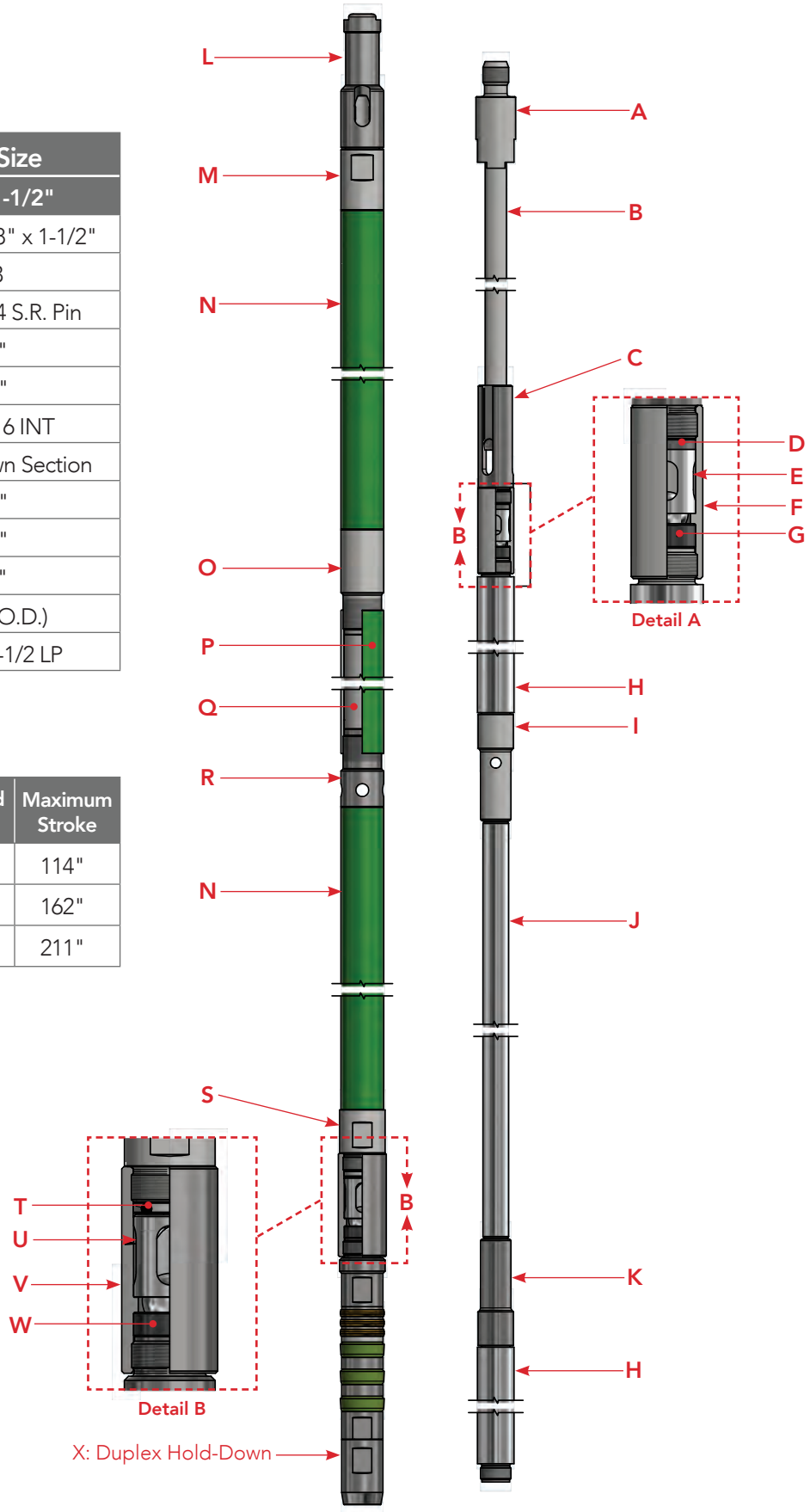

Duplex Pump, 20-150-RWBC

Dura Products
A DISTRIBUTION NOW COMPANY

25-200-RWBC - See diagram next page

Item	Description	# Req'd	Part Number
	Travelling Assembly		2-7/8" x 2"
A	Bushing, Valve Rod With 7/8" S.R. Pin	1	0608-0130-25
B	Valve Rod For 16' Pump With 5' Plungers	1	0656-1121-27
	Valve Rod For 20' Pump With 5' Plungers		0656-1121-75
	Valve Rod For 24' Pump With 5' Plungers		0656-1122-23
C	Bushing, Cage, Top Plunger	1	0628-4720-25
D	Gasket, Insert Cage	1	0698-0932-00
E	Cobalt Insert, Insert Cage	1	0622-2059-79
F	Shell, Insert Cage	1	0622-2073-20
G	Ball & Seat	1	0604-2018-16
H	Plunger, Spray Metal, 2", 5' Long	2	0629-1905-XX
I	Coupling, Perforated	1	0628-1112-20
J	Plunger, Connecting, For 16' Pump w/5' Plunger	1	0635-1261-70
	Plunger, Connecting, For 20' Pump w/5' Plunger		0635-1262-18
	Plunger, Connecting, For 24' Pump w/5' Plunger		0635-1262-66
K	Coupling	1	0628-1212-20
	Standing Assembly		
L	Guide, Valve Rod	1	0658-2026-21
M	Connector, Guide to Barrel	1	0626-2001-22
N	Barrel, Dura G-CH, 2", 16' Long	2	0610-2006-16
	Barrel, Dura G-CH, 2", 20' Long		0610-2006-20
	Barrel, Dura G-CH, 2", 24' Long		0610-2006-24
O	Connector, Barrel to Jacket	1	0626-1518-21
P	Jacket, Liner, 38" Long	1	0630-2011-03
Q	Liner, 36" Long	1	0632-2121-36
R	Connector, Perforated	1	0626-1225-21
S	Connector, Barrel to Insert Cage	1	0622-2237-21
T	Gasket, Stainless Steel	1	0698-1041-00
U	Cobalt Insert, Insert Cage	1	0622-2759-79
V	Shell, Insert Cage	1	0622-2773-21
W	Ball & Seat	1	0604-2724-26
X	Hold-Down, 3 Wedge, 3 Cup Complete*	1	0658-2057-01
	Seating Nipple, 2-7/8", For Above Hold-Down		0636-1220-12

*See Section H for Hold-Down information.

Item Description	Pump Size
	2-7/8" x 2"
Production Increase	61% Over 2-7/8" x 2" RW
Plunger Constant	0.762
S.R. Pin Connection	1-3/16" or 7/8 S.R. Pin
Fishing Neck O.D.	1-5/8"
Barrel O.D.	2.250"
Barrel Thread	2.0870"-16 INT
Hold-Down (Special)	See Hold-Down Section
Hold-Down NO-GO	2.339"
Seating Cup O.D.	2.320"
Travelling Valve	2"
Standing Valve	2-3/4" (2.339 O.D.)
Gas Anchor Connection	1-1/4" - 11-1/2 LP

Pitch Length of Plunger -
Nominal Length of Plunger Plus 3"

Barrel Length	Plunger Length	Connecting Plunger Length	Valve Rod Length	Maximum Stroke
16'	5'	170"	127"	113"
20'	5'	218"	175"	161"
24'	5'	266"	223"	210"

Plunger Fit Required	2" O.D.
Base Minus .001"	99
Base Minus .002"	98
Base Minus .003"	97
Base Minus .005"	95
Base Minus .007"	93

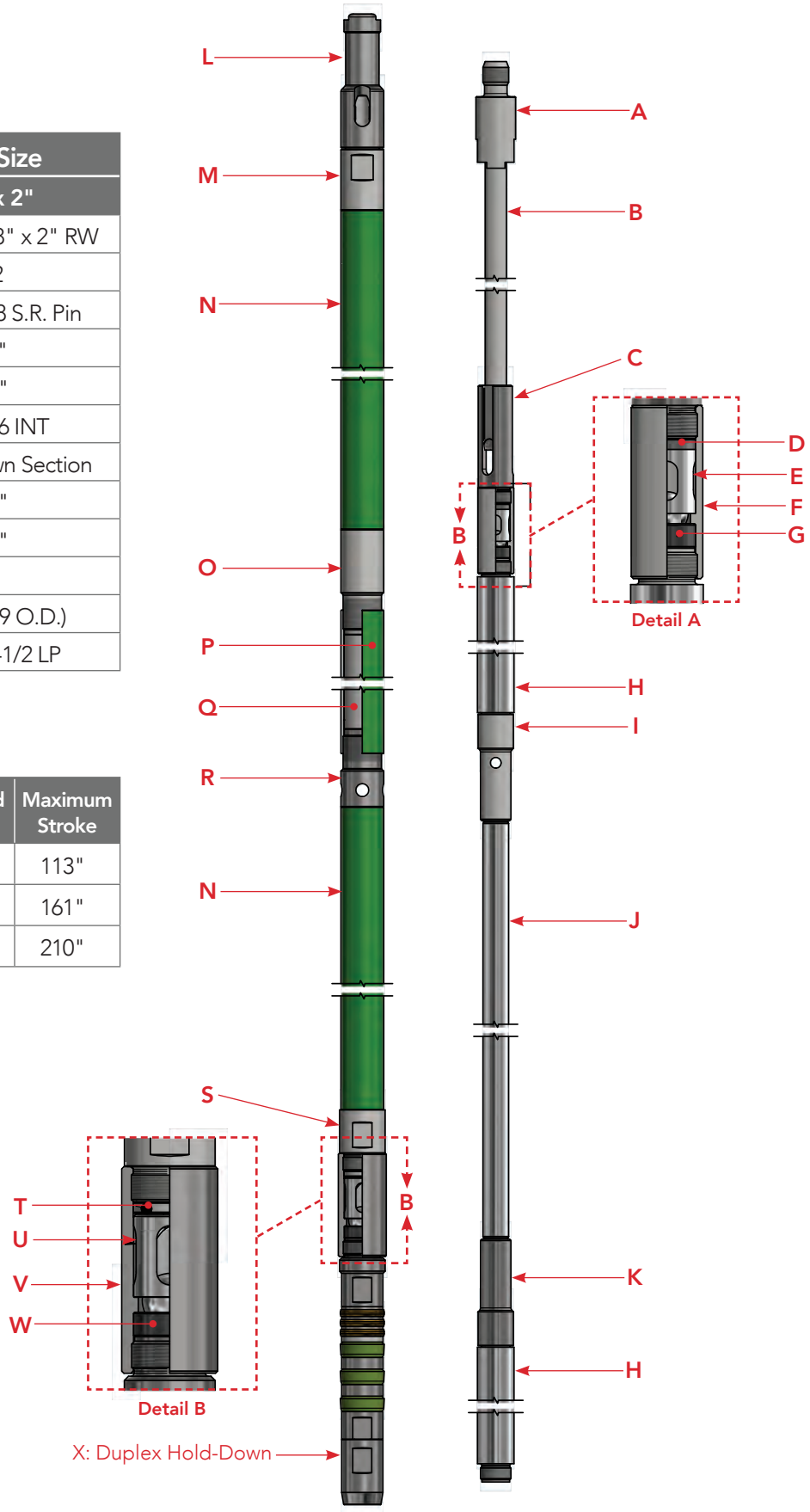

Duplex Pump, 25-200-RWBC

PRODUCTION ACCESSORIES

Dura Products™
A DISTRIBUTION NOW® COMPANY

POLLUTION CONTROL CHECK VALVE (PCCV)

The Pollution Control Check Valve and Stuffing Box (PCCV) is a wellhead accessory designed to protect and preserve the environment in the event of a polished rod failure. The PCCV is a solution for potential soil or water contamination problems.

DESCRIPTION AND OPERATION

The PCCV's method of operation is simple and reliable. When the polished rod breaks and the rod string falls through the PCCV stuffing box and BOP's, the PCCV's check valve closes and blocks the well bore before fluid can escape.

The design features a check valve flapper and a non-metallic wear block that rides against the polished rod. The wear block is held against the polished rod by an H2S resistant Inconel spring. When the polished rod breaks and the rod string falls, the spring-loaded valve flapper swings up and seats against a Viton O-ring and closes off the well bore. Well pressure against the backside of the check disk ensures a positive shut off. Once the broken polished rod is replaced the re-installation of the PCCV can protect against future failures.

Two 1/2" (12.7mm) NPT ports are provided which allow for the installation of fluid level monitors or pressure switches. These can be used to sense fluid presence or pressure in the valve body when the PCCV is installed above another stuffing box. It is recommended that the PCCV be installed above another stuffing box to provide a dual pack off. Dura Products manufactures adapters to facilitate the installation of the PCCV with either a Dual-Pac, Com-Pac, or Hercules style stuffing box. The PCCV can also function as a lubricator with the addition of light oil and or corrosion inhibitor into the body cavity. Fluid is sealed in at the top of the PCCV by using standard packing, packing gland and cap.

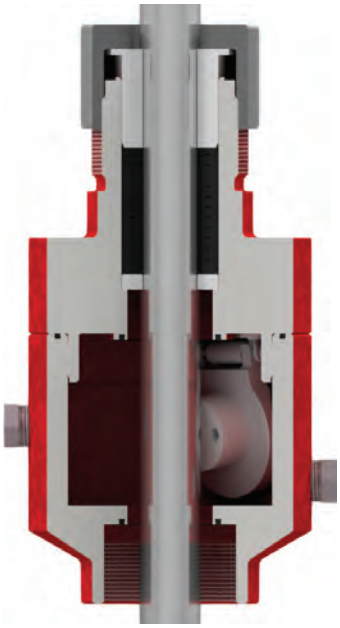

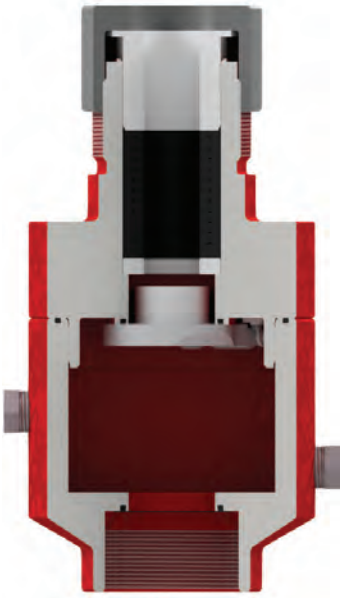

COM-PAC STUFFING BOX

The Com-Pac Stuffing Box (CPSB) is a self contained, ultra low profile, durable unit designed to operate at a pressure of 2,000 PSIG (14 MPa). Its trim design is ideally suited for multi-zone completions and low profile well heads. The CPSB has a threaded or flanged bottom connection, which allows for easy installation onto a pumping well head completion. It is available with 2-3/8" EUE, 2-7/8" EUE, 3"-8V API line pipe, 2-1/16"-5K 6B flange, and 2-9/16"-5K 6B flange connections. The Pack-Off Ring and the Gland center the polished rod in the CPSB reducing wears on the packing and eliminating possible polished rod contact with the stuffing box body. The upper packing chamber is designed to accept all packing materials with an OD of 2-1/4" (57mm) and a stack height of 2-5/8" (67mm).

The CPSB is designed to fit in tandem with the Dura Products Pollution Control Check Valve and Stuffing Box.

The unit can be used in H2S environments as materials used in the CPSB conform to NACE MR0175.

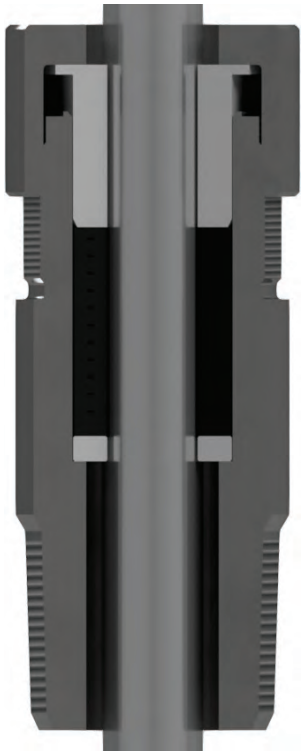

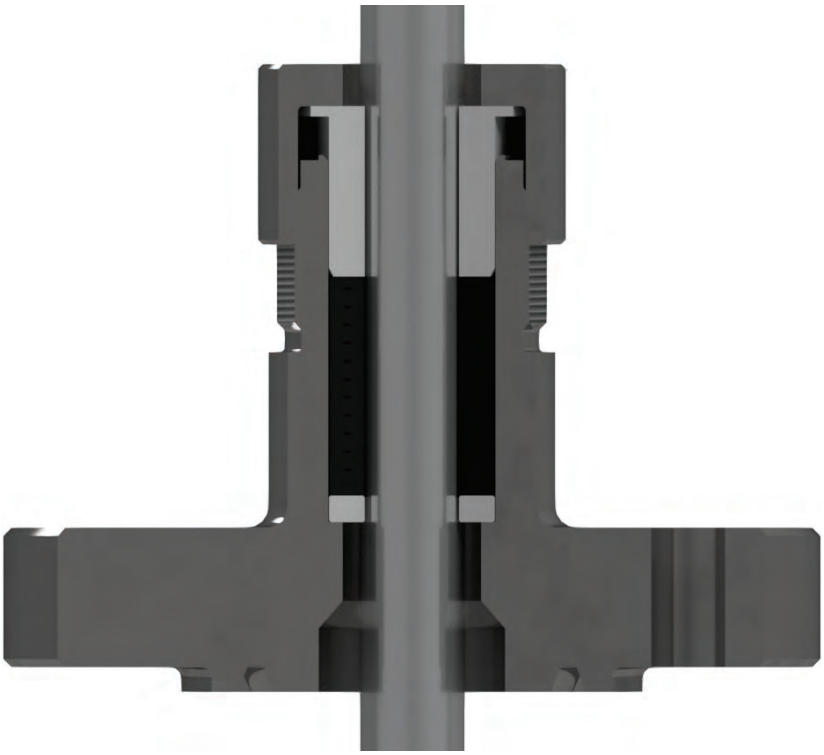

DUAL-PAC STUFFING BOX

The Dual-Pac Stuffing Box (DPSB) is a self contained, low profile, durable unit designed to operate at a pressure of 2,000 PSIG (14 MPa). The DPSB has a threaded bottom connection that allows for easy installation onto a pumping well head completion. It is available with 2-3/8" EUE, 2-7/8" EUE, 3"-8V API line pipe, and 2-9/16"-5K 6B flange connections. The Pack-Off Ring and the Gland center the polished rod in the DPSB, reducing wear on the packing and eliminating possible polished rod contact with the stuffing box body. The upper packing chamber is designed to accept all packing materials with an OD of 2- 1/4" [57mm] and a stack height of 2- 5/8" [67mm].

The upper packing may be replaced under pressure using the following procedure. (1) Back-off the Lock Nut from the stuffing box body and lock it against the Cap. This will allow the Retainer to be screwed down into the DPSB body without increasing the pressure on the packing. (2) Using a pipe wrench screw the Cap down. The reversing wedge shapes of the Retainer and the Element will pressure the Packing Element against the polished rod and seal off the well. (3) Backoff the Lock Nut from the Cap and re-tighten it against the DPSB body. This locks the Retainer in place. (4) Remove the Cap and replace the packing. Once the packing is replaced, reverse the procedure. The Retainer should be backed off full two turns to ensure that the Packing Element is not dragging against the polished rod.

The DPSB is designed to fit in tandem with the Dura Pollution Control Check Valve and Stuffing Box. The unit can be used in H2S environments as materials used in the DPSB conform to NACE MR0175.

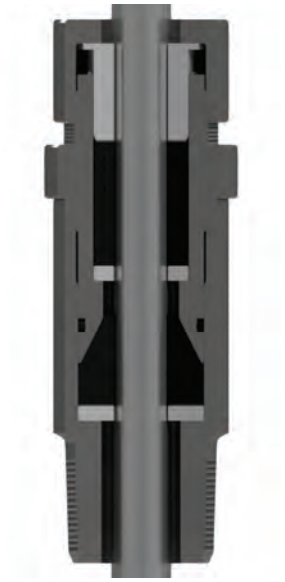

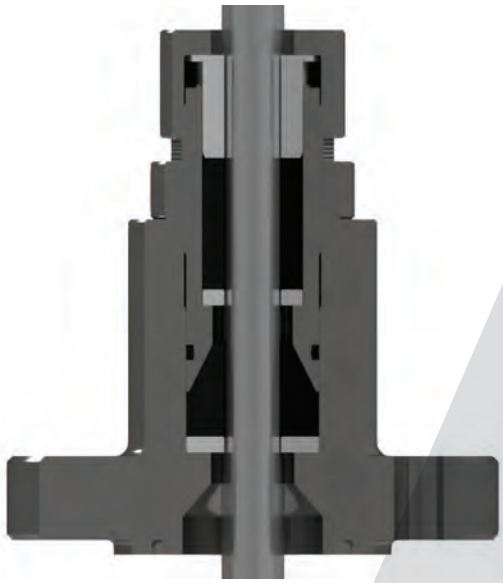

MISALIGNMENT STUFFING BOX

Designed as a wellhead accessory to compensate for misalignment of the wellhead in relationship to the pumping unit. This unit was made to be mounted into a flow-tee.

The unit is manufactured in two different styles: one has a packing chamber built into the upper swivel which would allow this to act as a stuffing box; the other unit is designed to be run below the Com-Pac or Dual-Pac stuffing boxes.

These units come pre-assembled and tested to 2,000 psi. They are manufactured from 4130 NACE material, and contain Viton® o-rings, which conforms to sour service specs.

The swivel was designed to move a maximum of 3 degrees which would help to compensate for any misalignment between the wellhead and the pumping unit.

This unit can also be run in conjunction with our Pollution Control Check Valve (PCCV). The stuffing box configuration uses standard 2-1/4" chevron style packing and all parts are interchangeable with our current stuffing boxes.

Pump Components

Dura Products™
A DISTRIBUTION NOW® COMPANY

The following "A" through "Z" sections contain our line of pump parts and accessories, arranged in alphabetical sequence.

All parts have been defined to show where and how they are used. The type of material, size and thread information are also provided where applicable.

The types of materials used are carbon steel (10XX), alloy steel (4130/4140 for fittings, 8620 for valve rod), stainless steel (304, 316, and 17-4 PH), NCA or Nickel-Copper Alloys (400 or 500), and brass (443 Admiralty and 464 Naval).

Tubing sizes have been designated by the nominal OD dimension (2-3/8, 2-7/8, 3-1/2, 4-1/2). All other size information is provided in accordance with standards associated with sub-surface pumps. All parts associated with balls and seats are designed for a flat type seat.

The fittings have been named in accordance with the designated API noun name and the following drawings in Table 1 are provided to assist in determining the correct terms.

TABLE 1

BUSHING MALE THREAD X FEMALE THREAD	CONNECTOR MALE THREAD X MALE THREAD	COUPLING FEMALE THREAD X FEMALE THREAD	NUT FEMALE THREAD X FEMALE THREAD	PLUG MALE THREAD ONLY

The 10 digit part number as shown in Figure 1 has been constructed as a "smart number" which incorporates key numbers to identify major and minor groupings, size, threads and material.

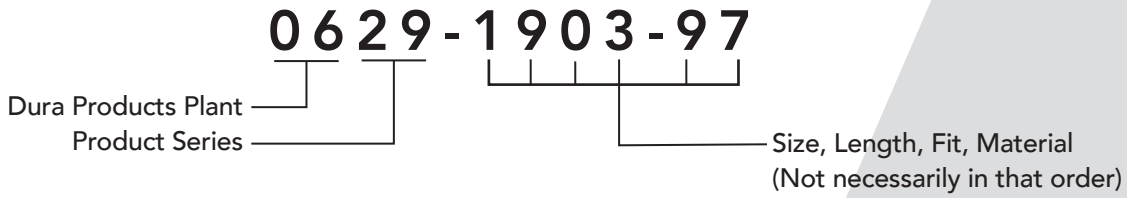

Figure 1

The numbers used to denote size are typically the decimal from of the actual size. The length is shown in feet or inches, and the material is designated by code number. The first four digits have been assigned by DURA PRODUCTS, the plant is "06", and the remaining product series numbers are shown in Table 2 & 3 on page PARTS 2.

TABLE 2: PUMPS, FITTINGS, BARRELS, AND OTHER PRODUCTS

POLISHED RODS	0600	CAGE - CLOSED	0622	VALVE RODS	0656
PUMP ASSEMBLIES	0602	CAGE - CLOSED, HARDLINED	0623	SEATING ASSEM/PARTS	0658
COUPLINGS & SUB-COUPLINGS	0603	CONNECTORS	0626	SEATING ASSEM/PARTS	0659
BALLS & SEATS	0604	COUPLINGS, EXTENSIONS	0628	PULL TUBES	0662
BUSHINGS	0608	NIPPLE, PUMP SEATING	0636	WELL HEAD EQUIPMENT	0664
THIN WALL BARRELS	0610	NIPPLE, LATHE CUT	0637	MISC.	0698
HEAVY WALL BARRELS	0612	LOCK NUT	0638	MISC.	0699
HEAVY WALL BARRELS	0613	PLUG	0639	UNIVERSAL PUMP HOLD DOWN	70XX
CAGE - OPEN	0620	PULLER	0654		

TABLE 3: PLUNGERS

BOX-END		PIN-END		MONEL PIN-END	
STEEL, SM, CARBIDE	0607	STEEL, SM	0629	STEEL, SM	0630
STEEL, SM	0649	STEEL, SM, GROOVED	0682	STEEL, SM, NICKEL	0660
STEEL, SM, ENC I.D.	0665	STEEL, SM, GROOVED, ENC I.D. & PINS	0687	STEEL, SM, GROOVED	0680
STEEL, SM, GROOVED	0689	**PIN-END RING**			
SAND SHAVER		STEEL, SM, PRESSURE ACTUATED (PA)	0652	**CUP PIN-END AND PIN X BOX-END**	
STEEL, SM, BOX-END	0672	STEEL, SM, PA, 10/SIDE	0653	PLUNGER, CUP	0640
STEEL, SM, PIN-END	0673	STEEL, SM, WIPER	0666		

BALLS AND SEATS

Dura Products™
A DISTRIBUTIONNOW™ COMPANY

DURA PRODUCTS offers a complete line of Balls and Seats capable of handling various well fluids. This careful selection of high quality materials, coupled with accurate manufacturing, as well as, 100% inspection and vacuum testing of each unit guarantee a flawless product. DURA Balls and Seats provide optimum service life under the most severe pumping conditions.

440C STAINLESS STEEL

This ball and seat is made of high quality corrosion resistant stainless steel with a hardness of 58-65 HRC for the ball, and 52-56 HRC for the seat. This grade has proven itself in oilfields worldwide to be a consistent performer, under most well conditions. It is recommended for wells where extreme abrasion and high corrosion are not the prime factors.

COBALT-CHROMIUM-TUNGSTEN (CCT)

Made of high quality non-magnetic non-ferrous material. Composed primarily of Chromium, Tungsten and Cobalt the ball hardness is 58-63 HRC while the seat hardness is 50-56 HRC. This ball and seat combination has been proven to be an outstanding performer worldwide in extreme abrasive and corrosive environments. CCT balls and seats are good for all but the most severe well conditions where only a Tungsten Carbide set will work.

TUNGSTEN CARBIDE

Made of Tungsten Carbide material with a hardness of 88-89 HRA for the ball, and 88-89.5 HRA for the seat. Tungsten Carbide has an extremely high resistance to fluid cutting, sand abrasion, spalling and corrosion. This product is today's ultimate in valve material and is recommended where all others have failed. It is also offered with a lighter weight Titanium Carbide ball where the regular ball is believed to damage the cage.

TITANIUM CARBIDE

Titanium Carbide is similar in characteristics to the Tungsten Carbide ball and seat, however it is lighter and has a higher resistance to galling and spalling.

NICKEL CARBIDE BALL AND SEAT

The Nickel Carbide ball is a composition of Nickel and Tungsten Carbide with a Cobalt binder, the seat has a slightly higher percentage of Nickel added to provide better impact resistance. The ball has a hardness of 89-90.5 HRA, and the seat has a hardness of 87.5-89 HRA. This material is recommended for highly corrosive applications.

TUNGSTEN CARBIDE SEAT WITH 440C STAINLESS STEEL BALL

This combination utilizes the premium grade Tungsten Carbide seat along with the economically priced 440C Stainless Steel which has been field proven and unbeatable in most environmental conditions including steam and fire floods.

TUNGSTEN CARBIDE SEAT WITH COBALT-CHROMIUM-TUNGSTEN (CCT) BALL

This combination utilizes a Tungsten Carbide seat in combination with the field proven CCT alloy ball for use in extreme abrasive and corrosive environments.

TUNGSTEN CARBIDE SEAT WITH TITANIUM CARBIDE BALL

This combination is our best performing and most popular offering having the advantage of corrosion and abrasion resistance of the Tungsten Carbide seat, as well as, the galling and spalling resistance of the Titanium Carbide ball.

BALLS

VALVE SIZE	BALL SIZE	BALL NUMBER
1.25	11/16	0604-0011-XX
1.25	3/4	0604-0012-XX
1.50	7/8	0604-0014-XX
1.50	15/16	0604-0015-XX
1.75	1	0604-0016-XX
1.75/2.00	1-1/8	0604-0018-XX
2.00/2.25	1-1/4	0604-0020-XX
2.25	1-3/8	0604-0022-XX
2.75	1-1/2	0604-0024-XX
2.75	1-11/16	0604-0027-XX
3.25	1-7/8	0604-0030-XX
3.25/3.75	2	0604-0032-XX
3.75	2-1/4	0604-0036-XX

Note: Replace XX with material code below.

MATERIAL CODES	
440C	00
Cobalt Alloy	12
Tungsten Carbide	14
Titanium Carbide	25
Silicon Nitride	52
Nickel Carbide	70

SEATS

VALVE SIZE	O.D. OF SEAT	BALL SIZE	SEAT NUMBER	TUNGSTEN CARBIDE
1-1/4	0.918	11/16 3/4	0604-1200-XX	0604-1204-14
1-1/2	1.168	7/8 15/16	0604-1500-XX	0604-1504-14
1-3/4	1.388	1 1-1/8	0604-1700-XX	0604-1704-14
2	1.4875	1-1/8 1- 1/4	0604-2000-XX	0604-2004-14
2-1/4	1.720	1-1/4 1-3/8	0604-2200-XX	0604-2204-14
2-3/4	2.010	1-1/2 1-11/16	0604-2700-XX	0604-2704-14
3-1/4	2.709	1-7/8 2	0604-3200-XX	0604-3204-14
3-3/4	3.072	2 2-1/4	0604-3700-XX	0604-3704-14

Note: Replace XX with material code below.

MATERIAL CODES	
440C	00
Cobalt Alloy	12
Titanium Carbide	25
Silicon Nitride	52
Nickel Carbide	70

BALLS AND SEATS

VALVE SIZE	BALL SIZE	API NUMBER	ASSEMBLY NUMBER
1-1/4"	11/16"	V11A125	0604-1211-XX
	3/4"	V11-125	0604-1212-XX
1-1/2"	7/8"	V11A150	0604-1514-XX
	15/16"	V11-150	0604-1515-XX
1-3/4"	1"	V11A175	0604-1716-XX
	1-1/8"	V11-175	0604-1718-XX
2"	1-1/8"	V11A200	0604-2018-XX
	1-1/4"	V11-200	0604-2020-XX
2-1/4"	1-1/4"	V11A225	0604-2220-XX
	1-3/8"	V11-225	0604-2222-XX
2-3/4"	1-1/2"	V11A250	0604-2724-XX
	1-11/16"	V11-250	0604-2727-XX
3-1/4"	1-7/8"	—	0604-3230-XX
	2"	—	0604-3232-XX
3-3/4"	2"	V11A375	0604-3732-XX
	2-1/4"	V11-375	0604-3736-XX

Smaller ball for each valve size is 'Alternate' size, the larger ball size is the 'Standard' or API size.
Note: Replace XX with material code below.

MATERIAL CODES	
440C Stainless Steel Ball and Seat	00
Titanium Carbide Ball w/ Tungsten Carbide Seat	16
Tungsten Carbide Ball w/ Tungsten Carbide Seat	20
Titanium Carbide Ball w/ Titanium Carbide Seat	25
Cobalt Alloy Ball and Seat	26
440C Ball w/ Tungsten Carbide Seat	44
Nickel Carbide Ball w/ Nickel Carbide Seat	70
Cobalt Alloy Ball w/ Tungsten Seat	74
Silicon Nitride Ball w/ Tungsten Carbide Seat	76

DURA BARRELS

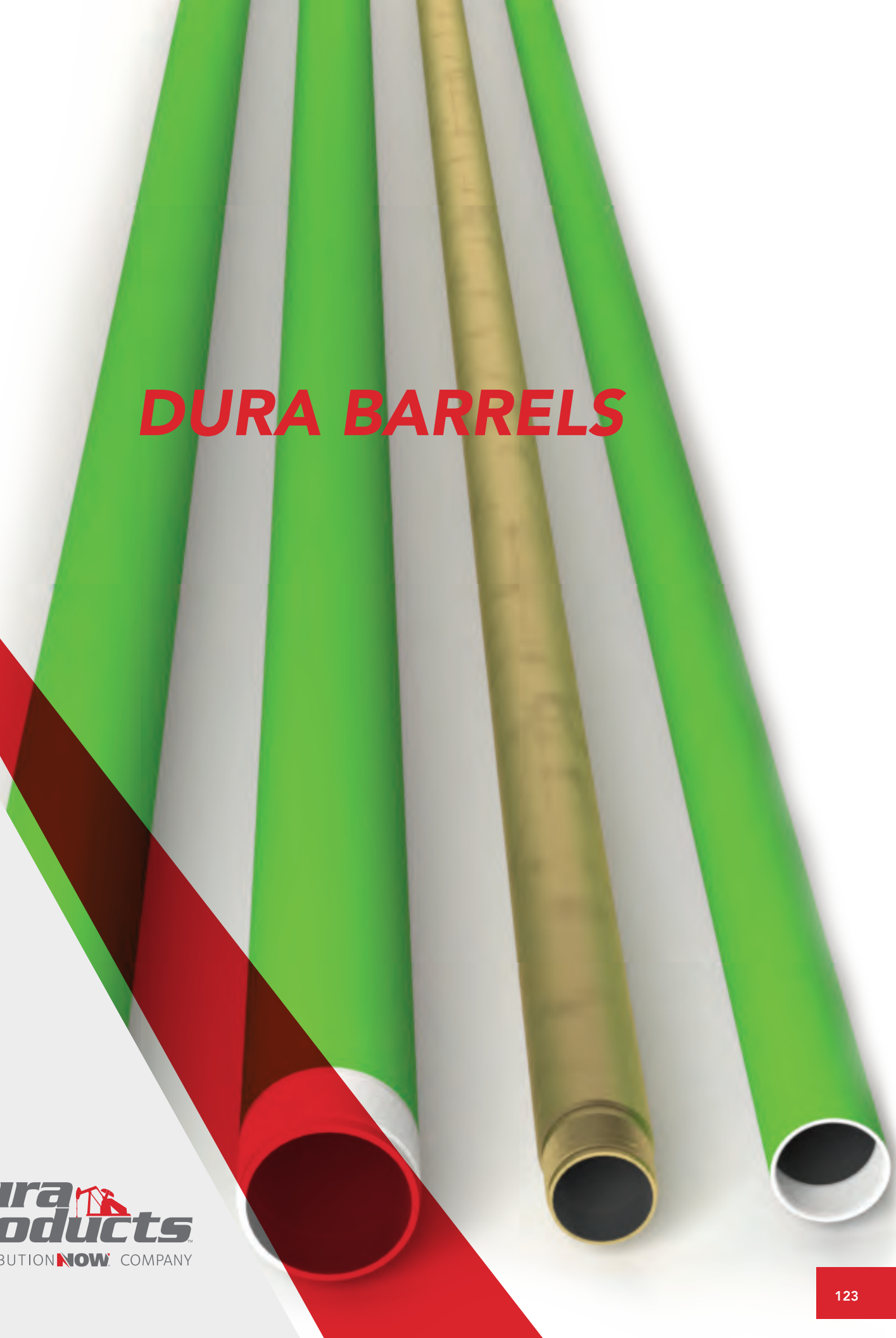

Dura Products™
A DISTRIBUTION NOW™ COMPANY

DURA PRODUCTS offers the following line of barrels to accommodate metal, cup, ring or combination of plungers. Each barrel meets the requirements of API 11AX.

DURA B-CH - BRASS-CHROME INTERNALLY PLATED

The Dura B-CH barrel is manufactured of admiralty brass and internally plated with chrome. The brass tube is more resistant than steel to the corrosive effects of well fluids.

It is recommended for wells with severe corrosion and abrasion.

DURA B-NI - BRASS-NICKEL CARBIDE INTERNALLY AND EXTERNALLY COATED

Dura B-NI has a hard composite coating of nickel alloy with particles of silicon carbide dispersed throughout. The composite coating is very resistant to corrosion and the carbides in the hard nickel matrix provide an excellent wear resistant surface.

If the coating is penetrated by mechanical damage and the brass tube material is exposed to the well fluids, the brass offers greater resistance to corrosion than a carbon steel barrel.

It is recommended for wells with severe corrosion and abrasion.

DURA G-CH - CARBON STEEL - CHROME INTERNALLY PLATED

Dura G-CH is fabricated from carbon steel material and has a uniform thickness of chrome plating applied on the I.D., offering resistance to abrasive sands and foreign materials.

It is recommended for wells with moderate corrosion and abrasion.

DURA G-NI - CARBON STEEL-NICKEL CARBIDE INTERNALLY AND EXTERNALLY COATED

The Dura G-NI has a hard composite coating of nickel alloy with particles of silicon carbide applied to the O.D. and I.D.; in addition, it is impregnated with PTFE. The coating is very resistant to corrosion and the carbides in the hard nickel matrix provide an excellent wear resistant surface.

It is recommended for wells with severe corrosion and no abrasion.

DURA H - CARBURIZED STEEL

Dura H barrels are fabricated from carbon steel material suitable for carburized hardening on the I.D. to 58 Rockwell "C" minimum, yet maintaining a ductile core. A ductile core resists impact loads and stress cracking often associated with downhole operating conditions.

It is recommended for wells with mild corrosion and abrasion, and not advised for moderate or severe corrosion.

DURA Z-CH - 501 (4-6) CHROME STEEL INTERNALLY PLATED

The Dura Z-CH barrel is made from 501 steel which has 4% to 6% chromium in the base material and is chrome plated on the I.D.

It is recommended for wells with moderate corrosion and abrasion.

.

This chart is an example of how to use the charts on the following pages.

RW - THIN WALL BARRELS

Size		API Part Number	DURA #[1,2,3]
I.D.	O.D.		
1-1/4	1-1/2	B11-125	0610-12MM-XX
1-1/2	1-3/4	B11-150	0610-15MM-XX
2	2-1/4	B11-200	0610-20MM-XX
2-1/2	2-3/4	B11-250	0610-25MM-XX

1- Replace 'MM' with material code.
2- Replace 'XX' with length in ft.
3- API lengths are from 2 to 40 ft in 1 ft increments.
Ex. 0610-1257-24 = RW, 1-1/4", B-NI, 24 ft long

MATERIAL CODES		
Heat Treated		
Dura H	Carburized	01
Plated		
Dura B-NI	Brass Nickel Carbide	57
Dura G-NI	Steel Nickel Carbide	61
Dura G-CH	Steel Chrome	06
Dura B-CH	Brass Chrome	08
Dura Z-CH	501 (4-6) Chrome Steel	41

Material codes may vary depending on the thread category.

RH - HEAVY WALL BARRELS

Size		API Part Number	DURA H	CHROME PLATED		NICKEL CARBIDE	
I.D.	O.D.			DURA B-CH	DURA G-CH	DURA B-NI	DURA G-NI
1-1/4	1-5/8	B12-125	0612-1201-XX	0612-1214-XX	0612-1206-XX	0612-1267-XX	0612-1261-XX
1-1/2	1-7/8	B12-150	0612-1501-XX	0612-1514-XX	0612-1506-XX	0612-1567-XX	0612-1561-XX
1-3/4	2-1/8	B12-175	0612-1701-XX	0612-1714-XX	0612-1706-XX	0612-1767-XX	0612-1761-XX
2-1/4	2-3/4	B12-225	—	0612-2214-XX	0612-2206-XX	—	—

I.D.	MATERIAL CODES		
1-1/4 1-1/2 1-3/4	***Heat Treated***		
	Dura H	Carburized	01
	Plated		
	Dura G-CH	Steel Chrome	06
	Dura B-CH	Brass Chrome	14
	Dura B-NI	Brass Nickel Carbide	67
	Dura G-NI	Steel Nickel Carbide	61
2-1/4	***Heat Treated***		
	Dura H	Carburized	01
	Plated		
	Dura G-CH	Steel Chrome	06
	Dura B-CH	Brass Chrome	14
	Dura B-NI	Brass Nickel Carbide	67
	Dura G-NI	Steel Nickel Carbide	61

Replace 'XX' with length in feet.

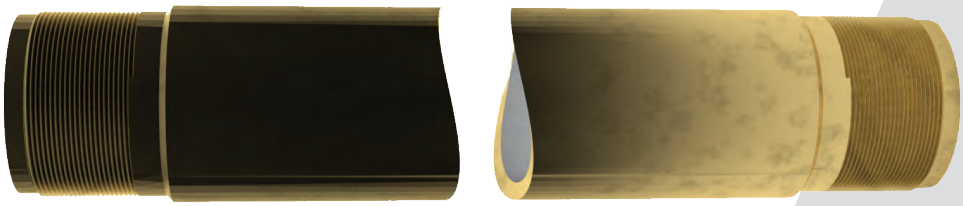

RX - HEAVY WALL BARRELS, INTERNALLY THREADED

Size		API Part Number	DURA H	CHROME PLATED		NICKEL CARBIDE	
I.D.	O.D.			DURA B-CH	DURA G-CH	DURA B-NI	DURA G-NI
1-1/2	1-7/8	B16-150-XX	—	0612-1516-XX	0612-1554-XX	0612-1557-XX	0612-1551-XX
2	2-5/16	B16-200-XX	—	0612-2098-XX	0612-2006-XX	0612-2067-XX	0612-2061-XX
2-1/4	2-3/4	—	0613-2251-XX	—	0612-2254-XX	0612-2267-XX	0612-2263-XX
2-3/4	3-1/4	—	0613-2752-XX	—	0612-2754-XX		
3-1/4	3-3/4	—	0612-3201-XX	—	0612-3254-XX	0612-3257-XX	0612-3263-XX
3-3/4	4-1/4	—	0612-3701-XX	—	0612-3759-XX	—	—

Replace 'XX' with length in feet.

MATERIALS	
Heat Treated	
Dura H	Carburized
Plated	
Dura G-CH	Steel Chrome
Dura B-CH	Brass Chrome
Dura B-NI	Brass Nickel Carbide
Dura G-NI	Steel Nickel Carbide

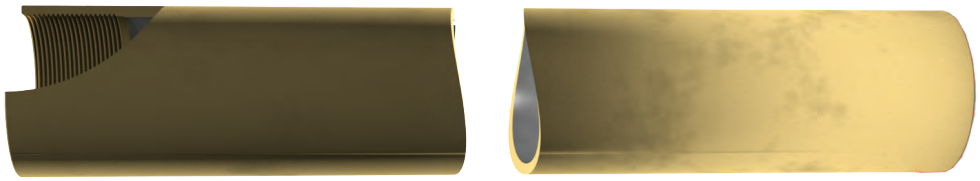

TH - HEAVY WALL BARRELS, TUBING PUMPS

Size		API Part Number	DURA H	CHROME PLATED		NICKEL CARBIDE	
I.D.	O.D.			DURA B-CH	DURA G-CH	DURA B-NI	DURA G-NI
1-3/4	2-1/4	B13-175-XX	—	0612-1744-XX	0612-1704-XX	—	—
2-1/4	2-3/4	B13-225-XX	0613-2201-XX	0612-2244-XX	0612-2204-XX	0612-2257-XX	0612-2261-XX
2-3/4	3-1/4	B13-275-XX	0613-2701-XX	0612-2744-XX	0612-2704-XX	0612-2767-XX	0612-2761-XX
3-3/4	4-1/4	B13-375-XX	0613-3701-XX	0612-3744-XX	0612-3704-XX	—	—

Replace 'XX' with length in feet.

MATERIALS	
Heat Treated	
Dura H	Carburized
Plated	
Dura G-CH	Steel Chrome
Dura B-CH	Brass Chrome
Dura B-NI	Brass Nickel Carbide
Dura G-NI	Steel Nickel Carbide

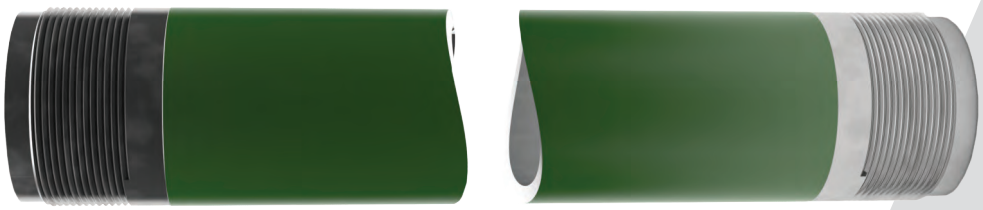

BUSHINGS

Dura Products™
A DISTRIBUTION NOW™ COMPANY

VALVE SEAT ON BARREL CAGE

Used on the lower end of the standing valve cage in stationary type pumps with top hold-down only. The bushing screws directly into the lower end of the closed barrel cage holding the seat firmly in place. Also incorporates a pipe thread terminal for gas anchors or strainer nipples.

Description			Part Number	Upper Thread Connection	Lower Thread Connection
Size		API Number			
Tubing	Valve				
2-1/16"	1.50"	B22-15	0608-0309-X0	1.2500-14 UNS-3A	3/4" Line Pipe
2-3/8"	1.75"	B22-20	0608-0310-X0	1.4704-14 UNS-3A	1" Line Pipe
2-7/8"	1.75"	—	0608-0321-X0	1.4704-14 UNS-3A	1" Line Pipe
2-7/8"	2.25"	B22-25	0608-0320-X0	1.8024-14 UNS-3A	1-1/4" Line Pipe
2-7/8"	2.25"	—	0608-0320-X1	1.8024-14 UNS-3A	1-1/2" Line Pipe
3-1/2"	2.75"	B22-30	0608-0330-X0	2.1095-11.5 UNS-3A	1-1/2" Line Pipe
4-1/2"	2.75"	—	0608-0340-X1	2.1095-11.5 UNS-3A	1-1/2" Line Pipe

MATERIAL CODES	
10XX	1
41X0	2
304 SS	3
NCA 400	5
PTFE/Steel	6
316 SS	7
Boronized	8

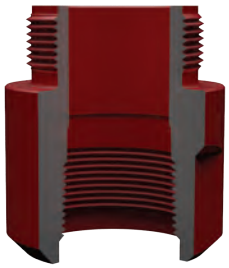

ADAPTING BUSHINGS FOR BOTTOM HOLD DOWN

These bushings are used to adapt a larger size hold down to the next size smaller standing valve

Tubing Size	Valve	I.D.	Part Numbers
2-3/8"	2"	0.88	0658-1021-X1
2-7/8"	1-3/4"	0.88	0658-2121-X0
2-7/8"	1-3/4"	0.88	0658-2121-X1*
3-1/2"	1-3/4"	0.88	0658-3121-X0
3-1/2"	2-1/4"	1.09	0658-3221-X0
3-1/2"	2-1/4"	1.16	0658-3221-X1
4-1/2"	3-1/4"	2.06	0658-4521-X0*

* - With wrench flats

MATERIAL CODES	
41X0	2
304 SS	3
NCA 400	5
PTFE/Steel	6
316 SS	7

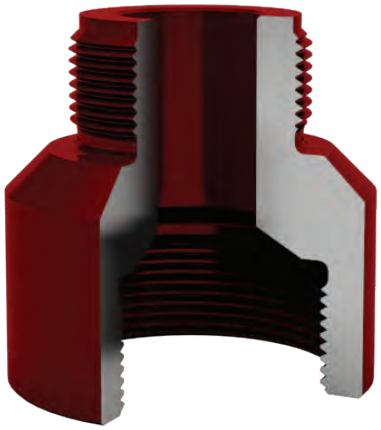

ADAPTING BUSHING FOR MANDREL, BOTTOM HOLD DOWN

These bushings are used to adapt a larger size hold down to the next size smaller standing valve

Hold Down Size	Upper Thread	Lower Thread	I.D.	Part Number	Mandrel
2-3/8"	1.4704-14 UNS 3A	1.5730-16 UNS-3B	1.00"	0658-1121-X0	0659-8745-20

MATERIAL CODES	
41X0	2
NCA 400	5
41X0 PTFE Coated	6

PULL TUBE BUSHING - OPEN CAGE

This Bushing is designed to be run on top of the pull tube, and threaded to fit the open cage size specified.

Pull Tube Size	Open Cage Size	Part Numbers	O.D.	Upper Threads	Lower Threads
15/16"	1-3/4"	0608-5012-X0	1.69	1.4704-14 UNS-3A	.9375-16 UNS-3B
1-1/8"	1-3/4"	0608-5015-X0	1.69	1.4704-14 UNS-3A	1.1250-16 UNS-3B
1-1/8"	2-1/4"	0608-5017-X0	2.19	1.8024-14 UNS-3A	1.1250-16 UNS-3B
1-1/2"	2-1/4"	0608-5020-X0	2.19	1.8024-14 UNS-3A	1.5000-16 UNS-3B
1-1/2"	2-3/4"	0608-5025-X1	2.63	2.1095-11.5 UNS-3A	1.5000-16 UNS-3B
1-7/8"	2-3/4"	0608-5025-X0	2.63	2.1095-11.5 UNS-3A	1.8750-16 UNS-3B
2-3/8"	2-3/4"	0608-5032-X5	2.80	2.1095-11.5 UNS-3A	2.3755-11.5 UNS-3B
2-3/8"	3-3/4"	0608-5037-X0	3.62	3.1715-11.5 UNS 3A	2.3755-11.5 UNS-3B

MATERIAL CODES	
41X0	2
304 SS	3
NCA 400	5
PTFE/Steel	6
316 SS	7

PULL TUBE BUSHING - COLLET TYPE

The Collet Type Pull Tube Bushing has been designed for use in wells where pull tube breakage occurs in or near the threaded region of the pull tube. By shifting the bending moment away from the pull tube thread,. the collet type design can help reduce pull tube breakages. The lock nut has been designed with an API clutch.

Description					
Pull Tube Size	Cage Size	Bushing OD	Length[1]	Part Numbers	
				Bushing	Locknut
15/16"	1-3/4"	1.69	4.16"	0608-7420-X0	0638-5520-0X
1-1/8"	1-3/4"	1.75	4.14"	0608-7420-X1	0638-5520-1X
1-1/8"	2-1/4"	2.19	4.14"	0608-7422-X1	0638-5520-1X
1-1/2"	2-1/4"	2.19	4.50"	0608-7422-X0	0638-5522-0X

MATERIAL CODES	
41X0	2
304 SS	3
NCA 400	5
316 SS	7

[1] length is the distance from the end of the pull tube to the end of the clutch.

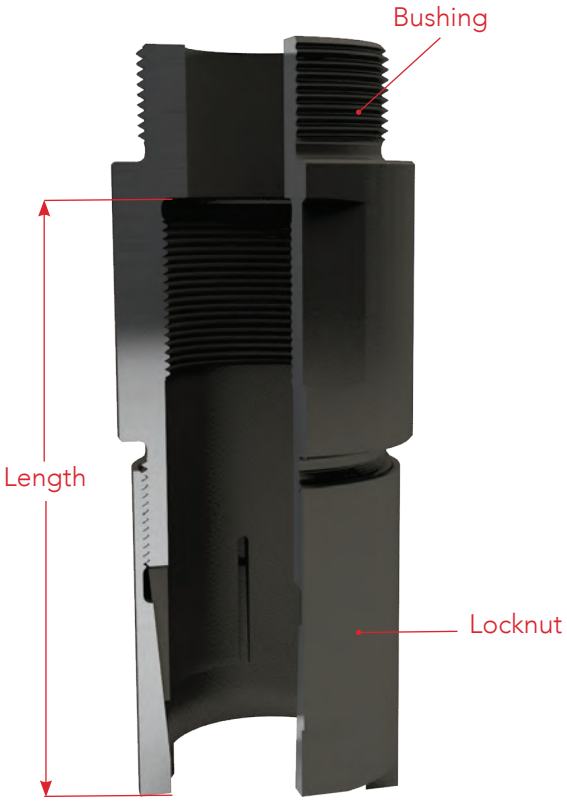

TOP HOLD-DOWN FOR RH BARREL

Used on stationary barrel pumps equipped with a 3-cup top hold-down. The upper end is internally threaded to accommodate the hold-down mandrel. The lower terminal is threaded externally for extension couplings.

Tubing Size	Pump Bore	API Number	Part Number	Dimensions	
				O.D.	I.D.
2-3/8"	1.250	S15-20	0658-1308-X0	1.75	1.00
2-7/8"	1.250	—	0658-2308-X0	2.25	1.06
2-7/8"	1.500	S15-25	0658-2307-X0	2.26	1.25
2-7/8"	1.750	—	0658-2508-X0	2.26	1.47
2-7/8"	1.750	—	0699-8628-X0	2.26	1.56
3-1/2"	1.750	—	0658-3508-X0	2.75	1.47
3-1/2"	2.250	S15-30	0658-3708-X0	2.75	1.55

Part Number	Upper Thread Connection	Lower Thread Connection	Mandrel	Extension	Direct Coupling
0658-1308-X0	1.1894-14 UNS-3B	1.5730-16 UNS-3A	0658-1001-10	0628-0112-XX	0628-1308-20
0658-2308-X0	1.5604-14 UNS-3B	1.5730-16 UNS-3A	0658-2001-10	0628-0112-XX	0628-2308-20
0658-2307-X0	1.5604-14 UNS-3B	2.0870-16 UNS-3A	0658-2001-10	0628-0115-XX	0628-2307-20
0658-2508-X0	1.5604-14 UNS-3B	2.0870-16 UNS-3A	0658-2001-10	0628-0117-XX	0628-2508-20
0699-8628-20	—	2.0870-16 UNS-3A	0699-8615-20	0628-0117-XX	—
0658-3508-X0	2.0035-11.5 UNS-3B	2.0870-16 UNS-3A	0658-3001-10	0628-0117-XX	0628-3508-20
0658-3708-X0	2.0035-11.5 UNS-3B	2.5730-16 UNS-3A	0658-3001-10	0628-0122-XX	0628-3708-20

Either the bushing with extension or direct coupling must be used to connect to barrel. Only steel mandrels, extensions, and couplings are listed.

MATERIAL CODES	
10XX	1
41X0	2
304 SS	3
NCA 400	5
PTFE/Steel	6
316 SS	7
Boronized Steel	8

INSERT CAGE TO RH BARREL

This fitting is used to connect an insert style cage to an externally threaded RH barrel, removing the need for a lower barrel extension.

THREAD INFORMATION

Barrel	Valve	Part Number	Upper Thread	Lower Thread	Shell Cage
1-1/4	1-3/4	0622-1737-X5	1.5730-16 UNS-3B	1.4704-14 UNS-3A	0622-1773-X0
1-1/2	2-1/4	0622-2237-X5	1.8750-16 UNS-3B	1.8024-14 UNS-3A	0622-2273-X0
1-3/4	2-1/4	0622-2237-X7	2.0870-16 UNS-3B	1.8024-14 UNS-3A	0622-2273-X0
2-1/4	2-3/4	0622-2737-X7	2.5730-16 UNS-3B	2.1095-11.5 UNS-3A	0622-2773-X0

MATERIAL CODES	
41X0	2
304 SS	3
NCA 400	5
PTFE/Steel	6
316 SS	7
Boronized/Steel	8

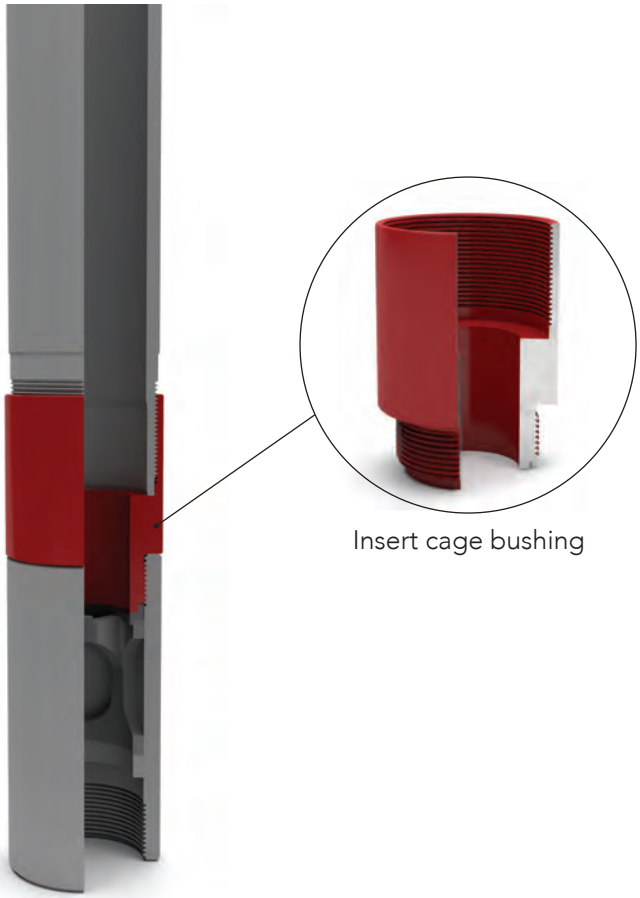

TOP HOLD-DOWN FOR RW BARREL

Used on stationary barrel top-hold-down pumps. Upper box accommodates a seating cup mandrel, while the lower end is externally threaded to connect to a thin wall barrel.

THREAD INFORMATION

Tubing Size	Pump Bore	API Number	Part Number	Dimensions		Upper Thread Connection	Lower Thread Connection	Mandrel
				O.D.	I.D.			
2-3/8"	1.250	S15-20-125	0658-1208-X0	1.75	0.94	1.1894-14 UNS-3B	1.3330-16 UNS-3A	0658-1001-10
2-3/8"	1.500	S15-20	0658-1308-X0	1.75	1.00	1.1894-14 UNS-3B	1.5730-16 UNS-3A	0658-1001-10
2-7/8"	1.250	—	0658-2208-X0	2.25	1.00	1.5604-14 UNS-3B	1.3330-16 UNS-3A	0658-2001-10
2-7/8"	1.500	—	0658-2308-X1	2.25	1.19	1.5604-14 UNS-3B	1.5730-16 UNS-3A	0658-2001-10
2-7/8"	1.500	—	0658-2308-X0	2.25	1.06	1.5604-14 UNS-3B	1.5730-16 UNS-3A	0658-2001-10
2-7/8"	2.000	S15-25	0658-2307-X0	2.26	1.25	1.5604-14 UNS-3B	2.0870-16 UNS-3A	0658-2001-10
2-7/8"	2.000	—	0658-2508-X0	2.26	1.47	1.5604-14 UNS-3B	2.0870-16 UNS-3A	0658-2001-10
2-7/8"	2.000	—	0699-8628-20	2.26	1.56	—	2.0870-16 UNS-3A	0699-8615-20
3-1/2"	1.500	—	0658-3308-X0	2.75	1.16	2.0035-11.5 UNS-3B	1.5730-16 UNS-3A	0658-3001-10
3-1/2"	2.000	—	0658-3508-X0	2.75	1.47	2.0035-11.5 UNS-3B	2.0870-16 UNS-3A	0658-3001-10
3-1/2"	2.000	—	0699-8659-X0	2.75	1.63	2.0035-11.5 UNS-3B	2.0870-16 UNS-3A	0658-3001-10
3-1/2"	2.500	S15-30	0658-3708-X0	2.75	1.55	2.0035-11.5 UNS-3B	2.5730-16 UNS-3A	0658-3001-10

Only steel mandrels listed.

MATERIAL CODES	
10XX	1
41X0	2
304 SS	3
NCA 400	5
PTFE/Steel	6
316 SS	7
Boronized Steel	8

TOP HOLD DOWN FOR RW BARREL WITH O-RING

This top hold down bushing is used to keep well fluid away from threads on RW pump barrels. The included o-ring(s) makes a seal against the honed barrel surface.

Tubing Size	Pump Bore	Part Number	Dimensions		Upper Thread Connection	Lower Thread Connection	Mandrel	Number of Grooves	Length to start of O-Ring Groove
			O.D.	I.D.					
2-3/8"	1-1/2"	0658-1308-X2	1.750"	1.00"	1.1894-14 UNS-3B	1.5730-16 UNS-3A	0658-1001-10	1	1.90"
2-3/8"	1-1/2"	0699-8648-X2	1.750"	1.19"	—	1.5730-16 UNS-3A	0699-8604-20	2	1.90"
2-7/8"	1-1/2"	0658-2308-X2	2.250"	1.19"	1.5604-14 UNS-3B	1.5730-16 UNS-3A	0658-2001-10	2	1.90"
2-7/8"	2"	0658-2508-X1	2.260"	1.47"	1.5604-14 UNS-3B	2.0870-16 UNS-3A	0658-2001-10	1	1.71"
2-7/8"	2"	0658-2508-X2	2.260"	1.47"	1.5604-14 UNS-3B	2.0870-16 UNS-3A	0658-2001-10	1	2.40"
2-7/8"	2"	0699-8628-X1	2.260"	1.56"	—	2.0870-16 UNS-3A	0699-8615-20	1	2.40"
3-1/2"	2"	0658-3508-X2	2.750"	1.55"	2.0035-11.5 UNS-3B	2.0870-16 UNS-3A	0658-3001-10	2	2.21"
3-1/2"	2-1/2"	0658-3708-X2	2.750"	1.55"	2.0035-11.5 UNS-3B	2.5730-16 UNS-3A	0658-3001-10	2	2.21"

Only steel mandrels listed.

MATERIAL CODES	
41X0	2
304 SS	3
NCA 400	5
PTFE/Steel	6
316 SS	7
Boronized Steel	8

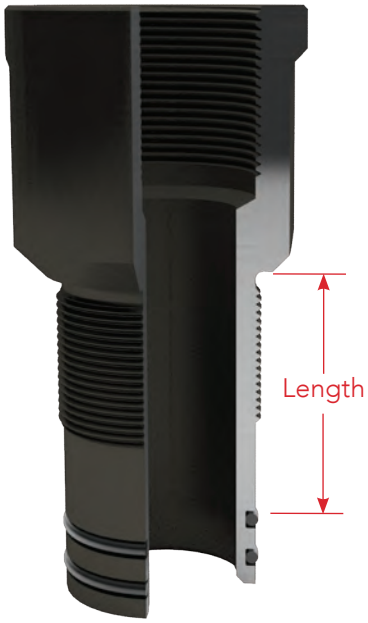

SIMPLEX TOP LOCK RH

Used on stationary type pumps equipped with simplex top locks. Upper end accommodates the lock sleeve mandrel and the lower end is externally threaded to fit the extension coupling.

Tubing Size	Pump Bore	Part Number	Dimensions		Upper Thread Connection	Lower Thread Connection	Mandrel	Extension
			O.D.	I.D.				
2-3/8"	1-1/4"	0658-1227-X0	1.76	0.94	1.5084-14 UNS-3B	1.5730-16 UNS-3A	0658-1023-20	0628-0112-XX
2-3/8"	1-1/4"	0658-1328-X0	1.75	1.06	1.5084-14 UNS-3B	1.5730-16 UNS-3A	0658-1023-20	0628-0112-XX
2-7/8"	1-1/4"	0658-2328-X0	2.25	1.06	1.9864-14 UNS-3B	1.5730-16 UNS-3A	0658-2023-20	0628-0112-XX
2-7/8"	1-1/2"	0658-2327-X0	2.25	1.25	1.9864-14 UNS-3B	2.0870-16 UNS-3A	0658-2023-20	0628-0115-XX
2-7/8"	1-3/4"	0658-2327-X0	2.25	1.25	1.9864-14 UNS-3B	2.0870-16 UNS-3A	0658-2023-20	0628-0117-XX
2-7/8"	1-1/2"	0658-2427-X0	2.25	1.31	1.9864-14 UNS-3B	2.0870-16 UNS-3A	0658-2023-20	0628-0115-XX
2-7/8"	1-3/4"	0658-2427-X0	2.25	1.31	1.9864-14 UNS-3B	2.0870-16 UNS-3A	0658-2023-20	0628-0117-XX

Extensions must be used to connect the bushing to the barrel.

SIMPLEX TOP LOCK RW

Used on stationary type pumps equipped with simplex top locks. Upper end accommodates the lock sleeve mandrel and the lower end is externally threaded to fit the barrel.

Tubing Size	Pump Bore	Part Number	Dimensions		Upper Thread Connection	Lower Thread Connection	Mandrel
			O.D.	I.D.			
2-3/8"	1-1/4"	0658-1228-X0	1.76	0.94	1.5084-14 UNS-3B	1.3330-16 UNS-3A	0658-1023-20
2-3/8"	1-1/2"	0658-1227-X0	1.76	0.94	1.5084-14 UNS-3B	1.5730-16 UNS-3A	0658-1023-20
2-3/8"	1-1/2"	0658-1328-X0	1.75	1.06	1.5084-14 UNS-3B	1.5730-16 UNS-3A	0658-1023-20
2-7/8"	1-1/4"	0658-2228-X0	2.26	0.94	1.9864-14 UNS-3B	1.3330-16 UNS-3A	0658-2023-20
2-7/8"	1-1/2"	0658-2328-X0	2.25	1.06	1.9864-14 UNS-3B	1.5730-16 UNS-3A	0658-2023-20
2-7/8"	2"	0658-2327-X0	2.25	1.25	1.9864-14 UNS-3B	2.0870-16 UNS-3A	0658-2023-20
2-7/8"	2"	0658-2427-X0	2.25	1.31	1.9864-14 UNS-3B	2.0870-16 UNS-3A	0658-2023-20
2-7/8"	2"	0658-2528-X0	2.26	1.31	1.9864-14 UNS-3B	2.0870-16 UNS-3A	0658-2023-20

MATERIAL CODES	
41X0	2
3XX SS	3
NCA 400	5
PTFE/Steel	6
316 SS	7

CUP PLUNGER BUSHING

Used on cup plungers and cup adaptors. Incorporates an internal thread for the plunger tube; and external thread for travelling cage or valve rod coupling.

THREAD INFORMATION

Size	Part Numbers	For Cup Plunger	For Upper Cup Extension	Upper Thread	Lower Thread
1-1/2"	0608-2015-X0	X	X	1.2500-14 UNS-3A	.8750-14 UNS-3B
1-3/4"	0608-1417-X0	X	X	1.4704-14 UNS-3A	1.1894-14 UNS-3B
2"	0608-1620-X0	X	X	1.5604-14 UNS-3A	1.3750-14 UNS-3B
2-1/4"	0608-1422-X0	X	—	1.8024-14 UNS-3A	1.5604-14 UNS-3B
2-1/2"	0608-1425-X0	X	—	2.1095-11.5 UNS-3A	1.7500-14 UNS-3B

MATERIAL CODES	
10XX	1
41X0	2
3XX SS	3
PTFE/Steel	6
316 SS	7

VALVE ROD BUSHING

The upper end of this fitting incorporates an API sucker rod pin. The lower end is internallly threaded to accommodate an API valve rod thread. A deep counterbore helps to reduce possible bending moments that could lead to premature valve rod failure.

Description				Part Numbers
Valve Rod OD	Sucker Rod Pin	API Numbers	Bushing OD	
11/16"	5/8"	B21-15	1-1/4"	0608-0210-X3
11/16"	5/8"	B21-20	1-1/2"	0608-0110-X3
11/16"	3/4"	B21-20	1-1/2"	0608-0110-X4
11/16"	7/8"	—	1-5/8"	0608-0110-X5
7/8"	3/4"	B21-25	1-5/8"	0608-0120-X4
7/8"	7/8"	B21-25	1-5/8"	0608-0120-X5
1-1/16"	3/4"	B21-30	1-5/8"	0608-0130-X4
1-1/16"	7/8"	B21-30	1-5/8"	0608-0130-X5
1-1/16"	1"	—	2"	0608-0130-X6

MATERIAL CODES	
41X0	2
304 SS	3
NCA 400	5
PTFE/Steel	6
316 SS	7

VALVE ROD COLLET TYPE BUSHING

The upper end of this fitting incorporates an API sucker rod pin. The lower end is internallly threaded to accommodate an API valve rod thread. A deep counterbore minimizes possible bending moments that could lead to premature valve rod failure.

Description				Part Numbers	
Valve Rod Size	Pin Size	Bushing OD	Length	Bushing	Locknut
11/16"	3/4"	1-1/2"	3.50	0608-7810-X4	0638-5210-0X
7/8"	3/4"	1-1/2"	3.63	0608-7820-X4	0638-5220-0X
7/8"	3/4"	1-5/8"	3.63	0608-7823-X4	0638-5220-1X
7/8"	7/8"	1-5/8"	3.63	0608-7820-X5	0638-5220-1X
1-1/16"	7/8"	1-5/8"	3.63	0608-7830-X5	0638-5230-1X

MATERIAL CODES	
41X0	2
304 SS	3
NCA 400	5
PTFE/Steel	6
316 SS	7

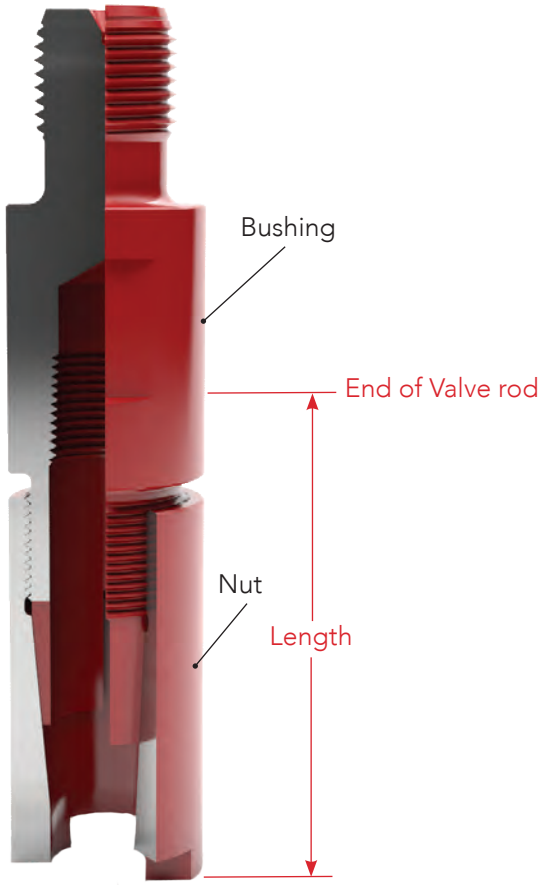

PULL TUBE TO BOX END PLUNGER, PORTED

Pull Tube Size	Plunger Size	Part Number	Box End Thread	Pin End Thread
1-1/2"	1-3/4"	0608-1317-X0	1.5000-16 UNS-3B	1.5084-14 UNS-3A
1-1/2"	2-1/2"	0628-1325-X0	1.5000-16 UNS-3B	2.1095-11.5 UNS-3A
1-7/8"	2-1/2"	0628-1325-X4	1.8750-16 UNS-3B	2.1095-11.5 UNS-3A
2-1/8"	3-1/4"	0608-1332-X0	2.0870-16 UNS 3B	2.8095-11.5 UNS-3A

MATERIAL CODES	
41X0	2
304 SS	3
NCA 400	5
PTFE/Steel	6
316 SS	7

PA PLUNGER TO BOX END PLUNGER

Plunger Size	Part Number	Box Thread	Pin Thread
2.50"	0608-3025-X0	2.1095-11.5 UNS 3B	2.1095-11.5 UNS 3A
2.75"	0608-3027-X0	2.1095-11.5 UNS 3B	2.3755-11.5 UNS 3A

MATERIAL CODES	
41X0	2
304 SS	3
NCA 400	5
PTFE/Steel	6
316 SS	7

CAGES

Our pump cages have been engineered to provide maximum flow capability. The cage has been designed to provide the correct ball lift and side clearance to ensure free and unobstructed fluid flow through the valve. Valve rib location and spacing help reduce excessive ball spin and chatter. This can help to increase valve life and maximize the valve efficiency. Both four piece insert-guided and hardlined cages are available in a variety of materials to suit your requirements.

Dura Products™
A DISTRIBUTION NOW® COMPANY

CLOSED, FOR DOUBLE VALVE, HARDLINED, FULL FLOW

Size	Part Number	Upper Thread	Lower Thread
1-1/4"	0623-1200-X0	1.0000-14 UNS-3A	1.0000-14 UNS-3B
1-1/2"	0623-1500-X0	1.2500-14 UNS-3A	1.2500-14 UNS-3B
1-3/4"	0623-1700-X0	1.4704-14 UNS-3A	1.4704-14 UNS-3B
2"	0623-2000-X0	1.5604-14 UNS-3A	1.5604-14 UNS-3B
2-1/4"	0623-2200-X0	1.8024-14 UNS-3A	1.8024-14 UNS-3B

MATERIAL CODES	
41X0	2
NCA 400	5
PTFE Steel	6
316 SS	7

Note: Replace 'X' in part number, with material code above.

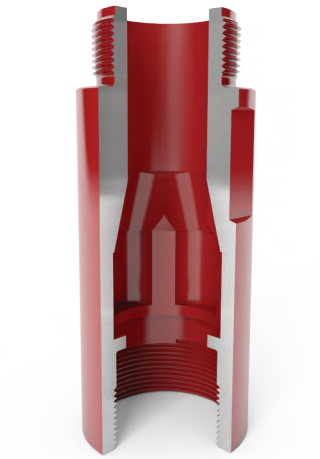

CLOSED, FOR BOX END PLUNGER, HARDLINED, FULL FLOW

Description		Part Number	Upper Thread	Lower Thread
Plunger Size	API Number			
2-3/4"	C15-275	0623-2746-X0	2.3755-11.5 UNS-3A	2.1095-11.5 UNS-3B
3-3/4"	C15-375	0623-3746-X0	3.3825-11.5 UNS-3A	3.1715-11.5 UNS-3B

MATERIAL CODES	
41X0	2
NCA 400	5
PTFE Steel	6
316 SS	7

Note: Replace 'X' in part number, with material code above.

CLOSED, FOR PIN-END PLUNGER, HARDLINED, FULL FLOW

Description		Part Number	Upper Thread	Lower Thread
Plunger Size	API Number			
1-1/4"	C13-125	0623-1244-X0	1.0000-14 UNS-3A	1.0000-14 UNS-3B
1-1/2"	C13-150	0623-1544-X0	1.2500-14 UNS-3A	1.2500-14 UNS-3B
1-3/4"	C13-175	0623-1744-X0	1.4704-14 UNS-3A	1.4704-14 UNS-3B
2"	C13-200	0623-2044-X0	1.5604-14 UNS-3A	1.5604-14 UNS-3B
2-1/4"	C13-225	0623-2244-X0	1.8024-14 UNS-3A	1.8024-14 UNS-3B
2-1/2"	C13-250	0623-2544-X0	2.1095-11.5 UNS-3A	2.1095-11.5 UNS-3B
2-3/4"	C13-275	0623-2744-X0	2.1095-11.5 UNS-3A	2.1095-11.5 UNS-3B

Note: Replace 'X' in part number, with material code above.

MATERIAL CODES	
41X0	2
NCA 400	5
PTFE Steel	6
316 SS	7

CLOSED, FOR BARREL, HARDLINED, FULL FLOW

Used on Stationary Type Rod Insert Pumps. The upper end is threaded to fit the barrel while the lower end receives the ball and seat, seat retainer, double valve cage, and/or hold-down assembly.

Description					Part Number	Upper Thread	Lower Thread
Size				API Part Number			
Tubing	RW	RH	Valve				
2-3/8"	1.25	—	1.75	C14-20-125	0623-1742-X2	1.3330-16 UNS-3A	1.4704-14 UNS-3B
2-3/8"	1.50	1.25	1.75	C14-20	0623-1742-X3	1.5730-16 UNS-3A	1.4704-14 UNS-3B
2-7/8"	2.00	1.50 / 1.75	2.25	C14-25	0623-2242-X0	2.0870-16 UNS-3A	1.8024-14 UNS-3B
3-1/2"	2.50	2.25	2.75	C14-30	0623-2742-X0	2.5730-16 UNS-3A	2.1095-11.5 UNS-3B

Note: Replace 'X' in part number, with material code above.

MATERIAL CODES	
41X0	2
NCA 400	5
PTFE Steel	6
316 SS	7

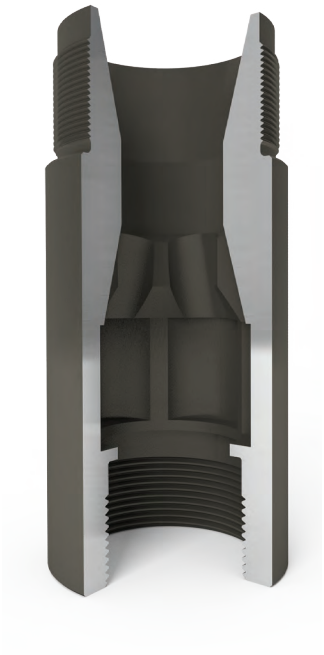

CLOSED, FOR BARREL, CLOSE SPACING, FULL FLOW

Description				Material	Upper Thread	Lower Thread
Size			Part Number			
Tubing	Barrel	Valve				
2-7/8"	2"	2-1/4"	0699-8646-10	41X0 Steel	2.0870-16 UNS-3A	1.8024-14 UNS-3B

CLOSED, FOR BARREL, CLOSE SPACING, HARDLINED, FULL FLOW

Description				Material	Upper Thread	Lower Thread
Size			Part Number			
Tubing	Barrel	Valve				
2-3/8"	1-1/4"	1-3/4"	0623-1752-X3	Multiple	1.5730-16 UNS-3A	1.4704-14 UNS-3B
2-7/8"	2"	2-1/4"	0623-8646-10	41X0 Steel	2.0870-16 UNS-3A	1.8024-14 UNS-3B

This cage requires Alternate (smaller) ball size.

MATERIAL CODES	
41X0	2
PTFE Steel	6
316 SS	7

INSERT CAGE, PIN END PLUNGER

Description		Part Numbers – Flat Type				
Plunger Size	API Style	A-Bushing	B-Shell	C-Gasket	D-Insert[2, 3]	Assembly #
1-1/4″	C13-125	0622-1234-XX[1]	0622-1273-X0[1]	0698-0929-00	0622-1259-79	0622-1280-X0
1-1/2″	C13-150	0622-1534-XX[1]	0622-1573-X0[1]	0698-0930-00	0622-1559-79	0622-1580-X0
1-3/4″	C13-175	0622-1734-XX[1]	0622-1773-X0[1]	0698-0931-00	0622-1759-79	0622-1780-X0
2″	C13-200	0622-2034-XX[1]	0622-2073-X0[1]	0698-0932-00	0622-2059-79	0622-2080-X0
2-1/4″	C13-225	0622-2234-X0	0622-2273-X0[1]	0698-0933-00	0622-2259-79	0622-2280-X0
2-1/2″	C13-250	0622-2534-X0	0622-2573-X0	0698-1041-00	0622-2759-79	0622-2580-X0
2-3/4″	C13-275	0622-2734-X0	0622-2773-X0	0698-1041-00	0622-2759-79	0622-2780-X0
3-1/4″	—	0622-3234-X0	0622-3273-X0	0698-1041-06	0622-3259-79	0622-3280-X0
3-3/4″	C13-375	0622-3734-X0	0622-3766-X0	0698-1041-07	0622-3759-79	0622-3780-X0

1 - Available in NCA K500[1].
2 - Insert cages are cast cobalt alloy.
3 - Alternate sized balls are recommended.

MATERIAL CODES	
41X0	2
304 SS	3
NCA 400	5
NCA K500	55
PTFE Steel	6
316 SS	7

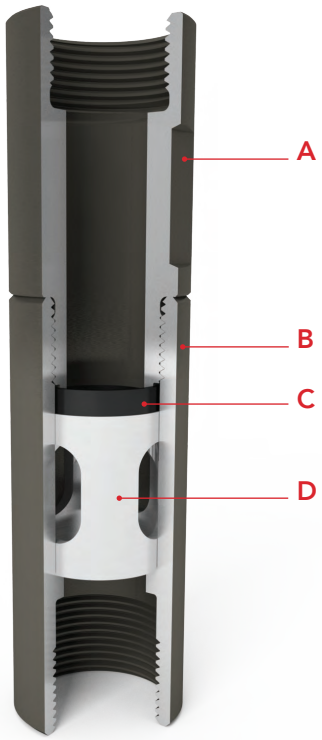

INSERT CAGE, BOX END PLUNGER

Description			Part Numbers				
Plunger Size	Valve Size	API Style	A-Connector	B-Shell	C-Gasket	D-Insert[2, 3]	Assembly #
1-3/4"	1-3/4"	C15-175	0622-1735-X0	0622-1773-X0	0698-0931-00	0622-1759-79	0622-1786-X0
2"	2"	—	0699-2035-X0	0622-2073-X0	0698-0932-00	0622-2059-79	0622-2086-X0
	2-1/4"	—	0622-2034-X1	0622-2073-X1[1]	0698-0933-00	0622-2259-79	—
2-1/4"	2-1/4"	C15-225	0622-2235-X0	0622-2273-X0	0698-0933-00	0622-2259-79	0622-2286-X0
2-1/2"	2-3/4"	—	0622-2536-X0	0622-2573-X0	0698-1041-00	0622-2759-79	0622-2586-X0
2-3/4"	2-3/4"	C15-275	0622-2735-X0	0622-2773-X0	0698-1041-00	0622-2759-79	0622-2786-X0
3-1/4"	3-1/4"	—	0622-3235-X0	0622-3273-X0	0698-1041-06	0622-3259-79	0622-3286-X0
3-3/4"	3-3/4"	C15-375	0626-3706-0X	0622-3766-X0	0698-1041-07	0622-3759-79	0622-3786-X0

1 - Oversized Cages
2 - Insert cages are cast cobalt alloy.
3 - Alternate sized balls are recommended.

MATERIAL CODES	
41X0	2
304 SS	3
NCA 400	5
PTFE Steel	6
316 SS	7

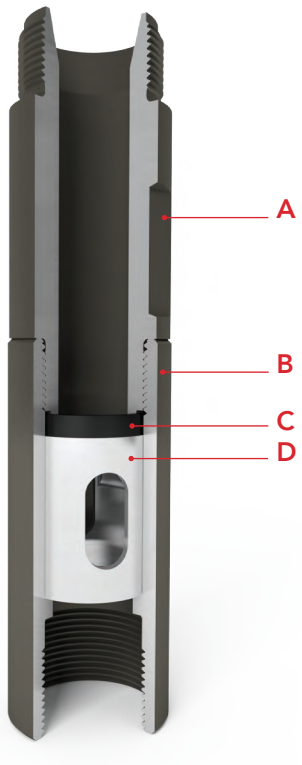

INSERT, DUPLEX, TOP PLUNGER

Description			Part Numbers			
Plunger Size	Valve Size	Valve Rod	A-Bushing	B-Shell	C-Gasket	D-Insert[1, 2]
1-1/2"	1-1/2"	7/8"	0628-4715-X4	0622-1573-X0	0698-0930-00	0622-1559-79
2"	2"	1-1/16"	0628-4720-X5	0622-2073-X0	0698-0932-00	0622-2059-79

1 - Insert cages are cast cobalt alloy.
2 - Alternate sized balls are recommended.

MATERIAL CODES	
41X0	2
304 SS	3
NCA 400	5
PTFE	6
316 SS	7

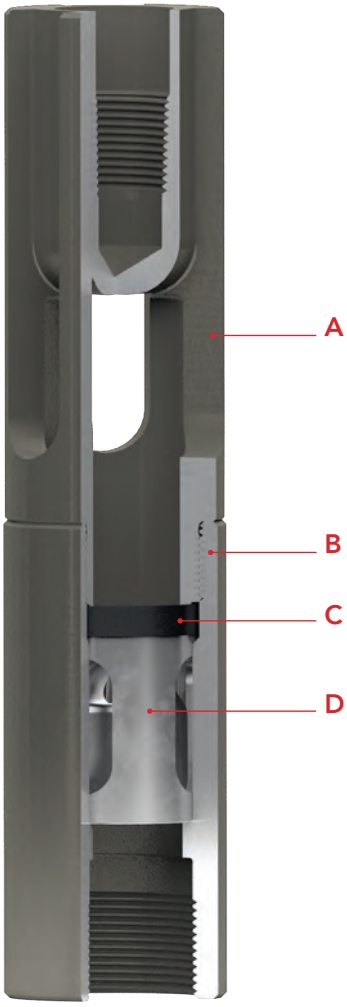

INSERT, DOUBLE VALVE, CLOSED

Description	Part Numbers			
Valve Size	A-Connector	B-Shell	C-Gasket	D-Insert[1, 2]
1-1-4"	0622-1236-X0	0622-1273-X0	0698-0929-00	0622-1259-79
1-1/2"	0622-1536-X0	0622-1573-X0	0698-0930-00	0622-1559-79
1-3/4"	0622-1736-X0	0622-1773-X0	0698-0931-00	0622-1759-79
2"	0622-2036-X0	0622-2073-X0	0698-0932-00	0622-2059-79
2-1/4"	0622-2236-X0	0622-2273-X0	0698-0933-00	0622-2259-79
2-1/2"	0622-2536-X0	0622-2573-X0	0698-1041-00	0622-2759-79
2-3/4"	0622-2736-X0	0622-2773-X0	0698-1041-00	0622-2759-79

MATERIAL CODES	
41X0	2
304 SS	3
NCA 400	5
PTFE	6
316 SS	7

1 - Insert cages are cast cobalt alloy.
2 - Alternate sized balls are recommended.

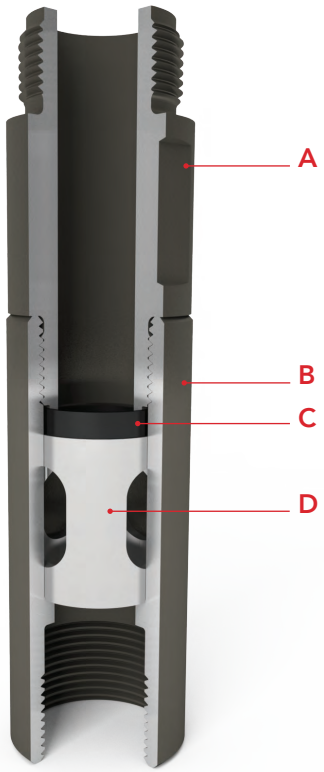

INSERT, STANDING, DUPLEX

Description				Part Numbers			
Pump Size	Pump Type	Valve Size	Shell OD	A-Connector	B-Shell	C-Gasket	D-Insert[2, 3]
2-3/8" x 1-1/2"	1-1/2" RW	2"	1.865	0622-2037-X0	0622-2073-X2	0698-0932-31[1]	0622-2059-79
2-7/8" x 2"	2" RW	2-3/4"	2.339	0622-2237-X1	0622-2773-X1	0698-1041-00	0622-2759-79

1 - Gasket is made from stainless steel.
2 - Insert cages are cast cobalt alloy.
3 - Alternate sized balls are recommended.

MATERIAL CODES	
41X0	2
304 SS	3
NCA 400	5
PTFE	6
316 SS	7

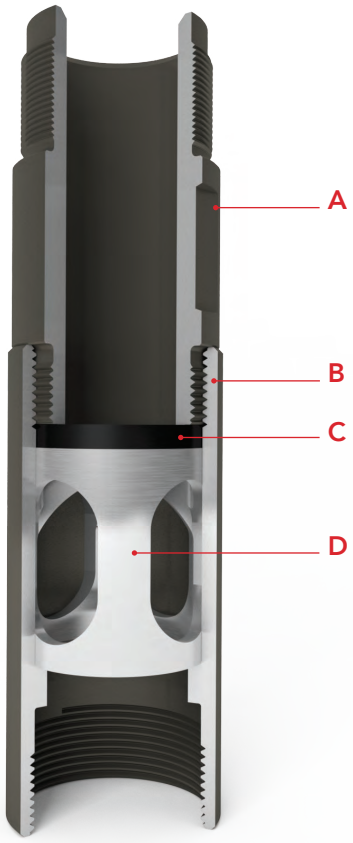

INSERT, BARREL, STANDING CLOSED

Description						Part Numbers				
Tubing Size	Cage OD	RH	RW	RX	Valve Size	A-Connector	B-Shell	C-Gasket	D-Insert[3, 4]	Assembly #
2-3/8"	1.47	—	1-1/4"	—	1-1/2"	0622-1537-X0	0622-1573-X0	0698-0930-00	0622-1559-79	—
2-3/8"	1.76	—	1-1/4"	—	1-3/4"	0622-1737-X2	0622-1773-X0	0698-0931-00	0622-1759-79	—
2-3/8"	1.76	1-1/4"	1-1/2"	—	1-3/4"	0622-1737-X0	0622-1773-X0	0698-0931-00	0622-1759-79	0622-1784-X0
2-7/8"	2.26	1-1/4"	1-1/2"	—	2-1/4"	0622-2034-X2	0622-2273-X0	0698-0933-00	0622-2259-79	—
2-7/8"	2.26	1-1/2" 1-3/4"	2"	—	2-1/4"	0622-2237-X0	0622-2273-X0	0698-0933-00	0622-2259-79	0622-2284-X0
3-1/2"	2.76	2-1/4"	2-1/2"	—	2-3/4"	0622-2737-X0	0622-2773-X0	0698-1041-00	0622-2759-79	—
4-1/2"	3.72	—	—	3-1/4"	3-3/4"	0626-3227-X0 [1]	0622-3766-X0	0698-1041-07	0622-3759-79	—
5-1/2" [2]	4.25	—	—	3-3/4"	3-3/4"	0622-3737-X0 [1]	0622-3773-X0	0698-1041-07	0622-3759-79	—

1 - Clutched
2 - Casing
3 - Insert cages are cast cobalt alloy.
4 - Alternate sized balls are recommended.

MATERIAL CODES	
41X0	2
304 SS	3
NCA 400	5
PTFE	6
316 SS	7

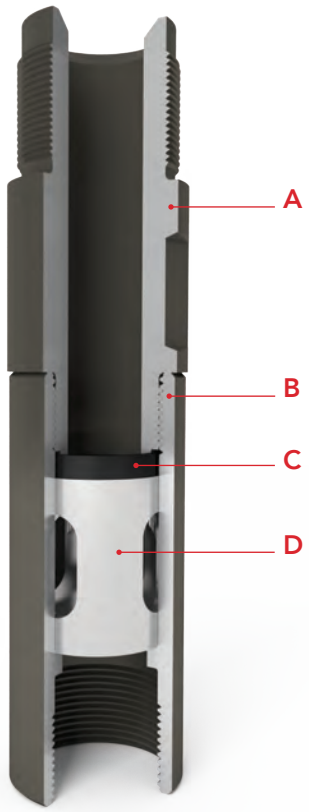

INSERT, TH, OVERSIZED, CLOSED

Description		Part Numbers-Flat Type				
Pump Bore	Valve Size	A-Bushing	B-Shell	C-Gasket	D-Insert[1, 2]	E-Clutch Ring
2-1/4"	3-3/4"	0699-8720-10	0622-3766-20	0698-1041-07	0622-3759-79	0699-8720-11
2-3/4"	3-3/4"	0699-8700-10	0622-3766-20	0698-1041-07	0622-3759-79	0699-8700-11

All above components except gasket and insert are shown in steel. Contact us for additional material options.

1 - Insert cages are cast cobalt alloy.
2 - Alternate sized balls are recommended.

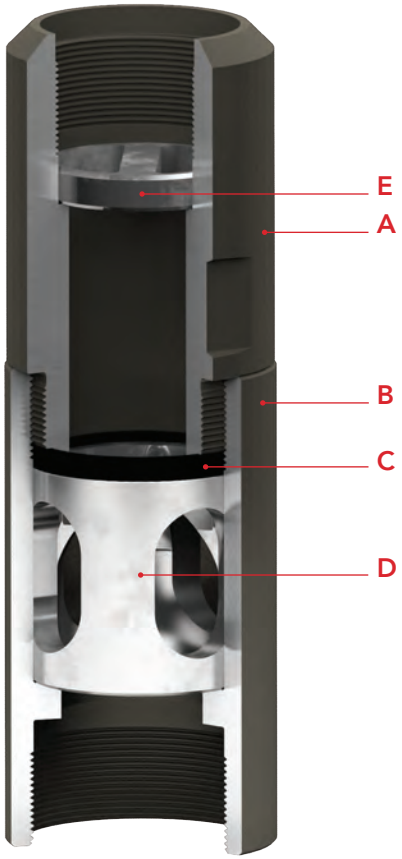

INSERT, TOP, PLUNGER, OPEN

Description				Part Numbers			
Valve Size	API Sucker Rod		API Style	A-Connector	B-Shell	C-Gasket	D-Insert[1, 2]
	Size	Pin Thread					
1-1/2"	5/8"	15/16"	C11-15	0620-1578-X3	0622-1573-X0	0698-0930-00	0622-1559-79
1-3/4"	3/4"	1-1/16"	C11-20	0620-1778-X4	0622-1773-X0	0698-0931-00	0622-1759-79
2-1/4"	3/4"	1-1/16"	C11-25	0620-2278-X4	0622-2273-X0	0698-0933-00	0622-2259-79
2-1/4"	7/8"	1-3/16"	C11-25	0620-2278-X5	0622-2273-X0	0698-0933-00	0622-2259-79
2-3/4"	7/8"	1-3/16"	C11-30	0620-2778-X5	0622-2773-X0	0698-1041-00	0622-2759-79
2-3/4"	1"	1-3/8"	C11-30	0620-2778-X6	0622-2773-X0	0698-1041-00	0622-2759-79
3-3/4"	1"	1-3/8"	C11-40	0620-3778-X6	0622-3766-X0	0698-1041-07	0622-3759-79

1 - Insert cages are cast cobalt alloy.
2 - Alternate sized balls are recommended.

MATERIAL CODES	
41X0	2
304 SS	3
NCA 400	5
PTFE	6
316 SS	7

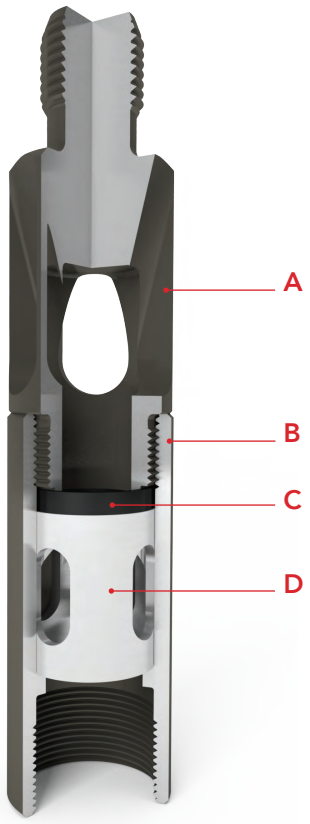

INSERT, TUBING PUMP, STANDING VALVE, OPEN

Description			Part Numbers			
Valve Size	Box Tread for Puller Pin	API Style	A-Bushing	B-Shell	C-Gasket	D-Insert[1, 2]
1-3/4"	3/4" - 10 UNC	C16-175	0620-1777-X0	0622-1773-X0	0698-0931-00	0622-1759-79
2-1/4"	3/4" - 10 UNC	C16-225	0620-2277-X0	0622-2273-X0	0698-0933-00	0622-2259-79
2-3/4"	3/4" - 10 UNC	C16-275	0620-2777-X0	0622-2773-X0	0698-1041-07	0622-2759-79
3-3/4"	3/4" - 10 UNC	C16-375	0620-3777-X0	0622-3766-X0	0698-1041-07	0622-3759-79

1 - Insert cages are cast cobalt alloy.
2 - Alternate sized balls are recommended.

MATERIAL CODES	
41X0	2
304 SS	3
NCA 400	5
PTFE	6
316 SS	7

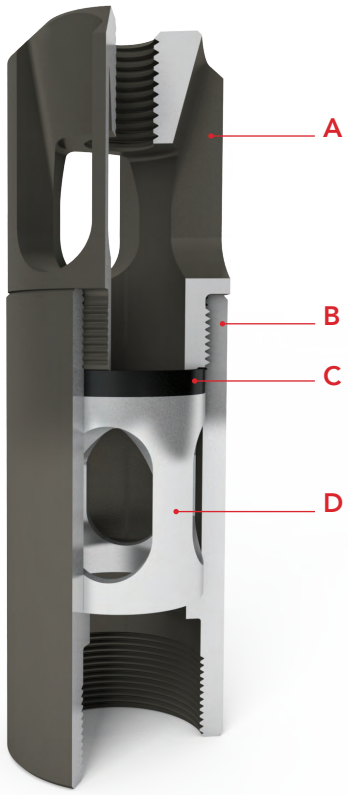

TOP PLUNGER

This 3-Wing Open Plunger Cage conforms to API specifications. The upper end contains a box thread to receive an API Valve Rod. The deep counter bore and close tolerances eliminate any bending moments in the thread area. The lower thread accommodates a pin end plunger, but requires a spacer if a ball and seat are not used.

Plunger size	Valve Rod		API Numbers	Part Number
	O.D.	MOD. LP Thread		
1-1/4"	11/16"	3/8" Nom.	C12-125	0620-1220-X0
1-1/4"	7/8"	1/2" Nom	—	0620-1220-X1
1-1/2"	11/16"	3/8" Nom.	C12-150-20	0620-1520-X0
1-1/2"	7/8"	1/2" Nom.	C12-150-25	0620-1520-X1
1-3/4"	7/8"	1/2" Nom.	C12-175	0620-1720-X0
2"	7/8"	1/2" Nom.	C12-200	0620-2020-X0
2"	1-1/16"	3/4" Nom.	—	0620-2020-X1
2-1/4"	1-1/16"	3/4" Nom.	C12-225	0620-2220-X0
2-1/2"	1-1/16"	3/4" Nom.	C12-250	0620-2520-X0
3-1/4"	1-1/16"	3/4" Nom.	—	0620-3220-X0

MATERIAL CODES	
41X0	2
304 SS	3
NCA 400	5
PTFE	6
316 SS	7

TOP OPEN

Valve Size	API Sucker Rod Pin	API Number	Part Number
1-3/4"	3/4"	C11-20	0620-1700-X4
2-1/4"	3/4"	C11-25	0620-2200-X4
2-1/4"	7/8"	C11-25	0620-2200-X5
2-3/4"	3/4"	C11-30	0620-2700-X4
2-3/4"	7/8"	C11-30	0620-2700-X5
3-1/4"	7/8"	—	0620-3200-X5
3-1/4"	1"	—	0620-3200-X6
3-3/4"	3/4"	C11-40	0620-3700-X4
3-3/4"	7/8"	C11-40	0620-3700-X5
3-3/4"	1"	C11-40	0620-3700-X6

MATERIAL CODES	
41X0	2
304 SS	3
NCA 400	5
PTFE	6
316 SS	7
Boronized Steel	8

FOR OPEN STANDING VALVE

Description		Part Number
Valve Size	API Number	41X0
1-3/4"	C16-175	0620-1702-20
2-1/4"	C16-225	0620-2202-20
2-3/4"	C16-275	0620-2702-20
3-3/4"	C16-375	0620-3702-20

MATERIAL CODES	
41X0	2
304 SS	3
NCA 400	5
PTFE	6
316 SS	7

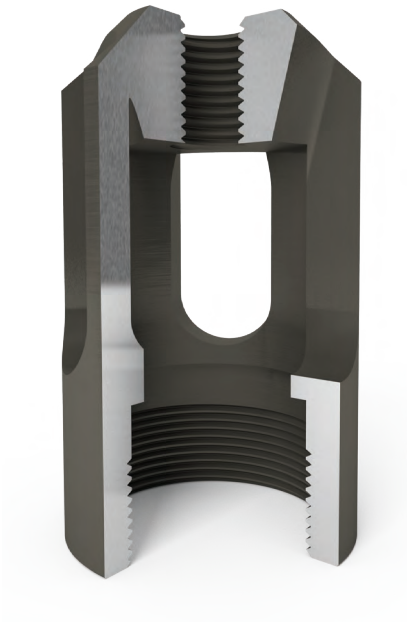

CONNECTORS

Dura Products™
A DISTRIBUTION NOW™ COMPANY

UPPER BARREL

Description					API Numbers	Part Numbers
Tubing Size	RW Pump Size	RH Pump Size	ID	OD		
1.900"	1-1/4"	—	.94"	1.440"	C21-15	0626-1221-1X
2-3/8"	1-1/4"	—	.94"	1.750"	C21-20-125	0626-1201-1X
2-3/8"	1-1/2"	1-1/4"	1.06"	1.750"	C21-20	0626-1501-1X
2-7/8"	1-1/2"	1-1/4"	1.06"	2.312" *	—	0626-1501-X2
2-7/8"	2	1-1/2" & 1-3/4"	1.25"	2.260"	C21-25	0626-2001-1X
2-7/8"	2	1-3/4"	1.38"	2.312"	—	0626-2001-2X
3-1/2"	2-1/2"	2-1/4"	1.56"	2.750"	C21-30	0626-2501-3X

*Large O.D to stabilize pump

MATERIAL CODES	
41X0	2
304 SS	3
NCA 400	5
PTFE Steel	6
316 SS	7

BOX END PLUNGER TO SUCKER ROD PIN

Plunger Size	API Sucker Rod Pins	Part Numbers
1-3/4"	3/4"	0626-1769-X4
2-1/4"	3/4"	0626-2269-X4
2-1/4"	7/8"	0626-2269-X5
2-3/4"	3/4"	0626-2769-X4
2-3/4"	7/8"	0626-2769-X5
3-1/4"	7/8"	0626-3269-X5
3-3/4"	7/8"	0626-3769-X5

MATERIAL CODES	
41X0	2
304 SS	3
NCA 400	5
PTFE Steel	6
316 SS	7

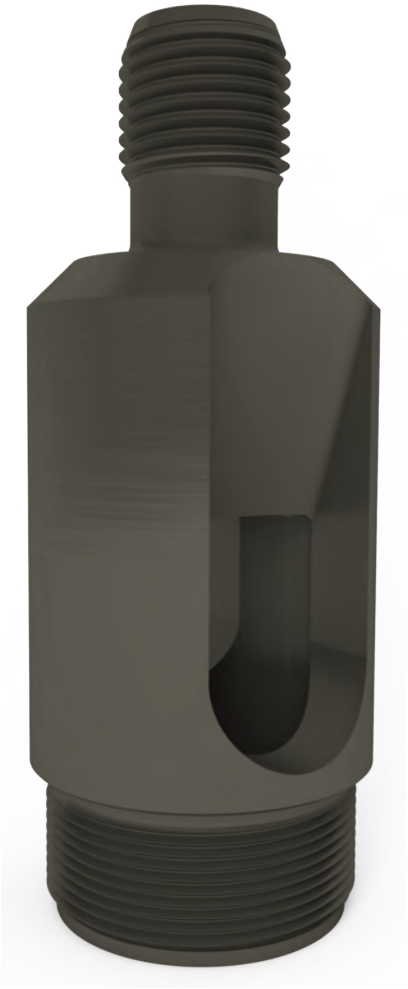

BARREL TO JACKET, DUPLEX AND TWO STAGE PUMPS

Tubing	Pump Bore	Pump Type			Part Number
2-3/8"	1-1/4"	Two Stage	—	RH	0626-1218-1X
2-3/8"	1-1/2"	Two Stage	Duplex	RW	0626-1218-1X
2-7/8"	1-3/4"	Two Stage	—	RH	0626-1518-2X
2-7/8"	2"	Two Stage	Duplex	RW	0626-1718-X1

MATERIAL CODES	
41X0	2
304 SS	3
NCA 400	5
PTFE Steel	6
316 SS	7

PERFORATED, FOR DUPLEX PUMP

Tubing	Pump Bore	Pump Type	Part Number
2-3/8"	1-1/2"	RW	0626-1125-X1
2-7/8"	2"	RW	0626-1225-X1

MATERIAL CODES	
41X0	2
304 SS	3
NCA 400	5
PTFE Steel	6
316 SS	7

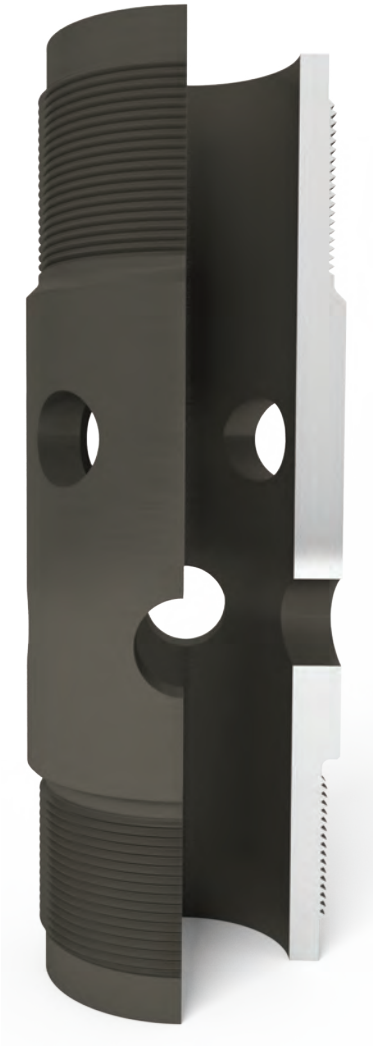

BOX END PLUNGER TO PIN END PLUNGER CAGE

Plunger Size	Lower Connection	OD	Material	Part Number
2.00"	1.5604-14 UNS-3A	1.94"	41X0	0626-2035-02
3.75"	3.1715-11.5 UNS-3A	3.72"	41X0	0626-3701-0X

COUPLINGS

Dura Products™
A DISTRIBUTION NOW™ COMPANY

PLUNGER TO PLUNGER, FOR DUPLEX PUMPS

Tubing	Pump Bore	Pump Type	Part Number
2-3/8"	1-1/2"	RW	0628-1211-X0
2-7/8"	2"	RW	0628-1212-X0

MATERIAL CODES	
41X0	2
NCA 400	5
PTFE Steel	6
316 SS	7

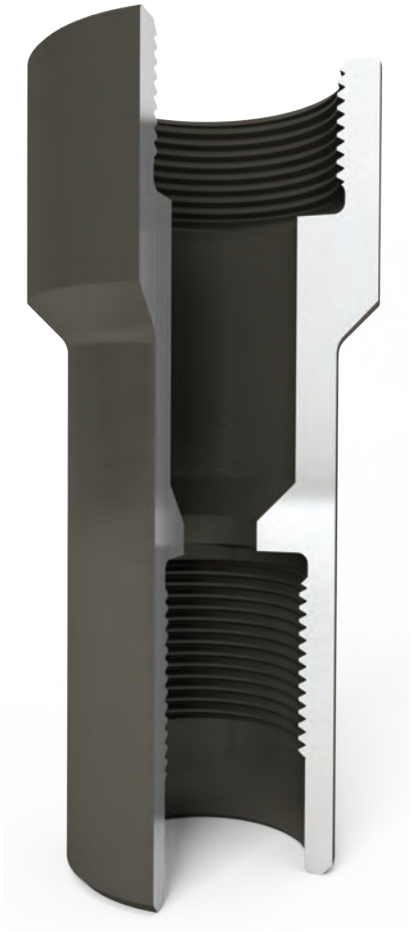

PLUNGER TO PLUNGER, PERFORATED, FOR DUPLEX PUMPS

Tubing	Pump Bore	Pump Type	Part Number
2-3/8"	1-1/2"	RW	0628-1111-X0
2-7/8"	2"	RW	0628-1112-X0

MATERIAL CODES	
41X0	2
NCA 400	5
PTFE Steel	6
316 SS	7

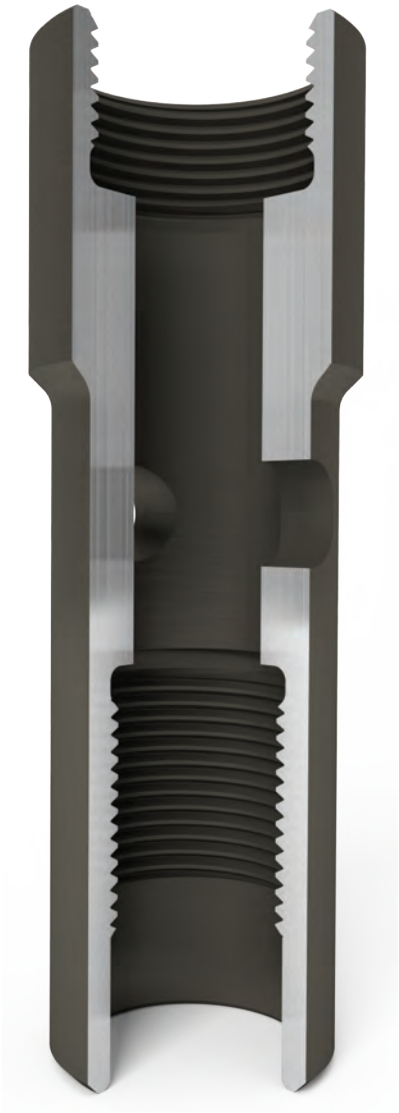

TUBING PUMP COUPLING, EXTERNAL UPSET THREAD

Tubing Size & Thread	Pump Bore	API Number	OD	Part Number
2-3/8"	1-3/4"	C35-20	3.050	0628-1810-X5
2-7/8"	2-1/4"	C35-25	3.687	0628-1820-X5
3-1/2"	2-3/4"	C35-30	4.500	0628-1830-X5
4-1/2"	3-3/4"	C35-40	5.563	0628-1845-X9

MATERIAL CODES	
10XX	1
41X0	2
304 SS	3
PTFE Steel	6
ENC Steel	7

TUBING PUMP COUPLING, NON UPSET THREAD

Tubing Size & Thread	Pump Bore	API Number	OD	Part Number
2-7/8"	2-1/4"	—	3.500	0628-1820-X4
3-1/2"	2-3/4"	—	4.250	0628-1830-X4
4-1/2"	3-3/4"	—	5.200	0628-1845-X4

TUBING PUMP COUPLING, EXTERNAL UPSET THREAD, FOR RH BARREL

Tubing Size & Thread	Pump Bore	API Number	OD	Part Number
2-3/8"	1-3/4" RH	—	3.063	0628-0410-X5

SPECIAL CLEARANCE TUBING PUMP COUPLINGS

Tubing Size	Pump Bore	Tubing Thread	OD	Part Number
2-7/8"	2-1/4"	2-7/8" 8EU	3.460	0628-7420-X5
2-7/8"	2-3/4"	2-7/8" 8EU	3.706	0628-4127-X5
3-1/2"	2-3/4"	3-1/2" 8EU	4.180	0628-7430-X5

MATERIAL CODES	
10XX	1
41X0	2
304 SS	3
PTFE Steel	6
ENC Steel	7

RH BARREL EXTENSIONS

Size		API Number	10XX	304 Stainless	316 Stainless	Brass
Tubing	Barrel					
2-3/8"	1-1/4"	C31-125	0628-0112-XX	0628-3612-XX	0628-3712-XX	0628-3812-XX
2-7/8"	1-1/2"	C31-150	0628-0115-XX	0628-3615-XX	0628-3715-XX	0628-3815-XX
2-7/8"	1-3/4"	C31-175	0628-0117-XX	0628-3617-XX	0628-3717-XX	0628-3817-XX
3-1/2"	2-1/4"	C31-225	0628-0122-XX	0628-3622-XX	0628-3722-XX	0628-3822-XX

Common nominal lengths are 4, 6, 12, 24, 36 and 48 inches.
Extensions may not be available in all sizes, lengths or materials. Call for availability.

DIRECT CONNECT TOP HOLD DOWN MANDREL TO RH BARREL

Tubing Size	Pump Bore	Hold-Down	Mandrel	Part Number
2-3/8"	1.25	API 3 Cup	0658-1001-10	0628-1308-X0
2-7/8"	1.25	API 3 Cup	0658-2001-10	0628-2308-X0
2-7/8"	1.50	API 3 Cup	0658-2001-10	0628-2307-X0
2-7/8"	1.50	Pacific	0699-8591-20	0628-2307-X1
2-7/8"	1.75	API 3 Cup	0658-2001-10	0628-2508-X0
2-7/8"	1.75	Friction Seal	0658-2094-10	0628-2067-X0
3-1/2"	1.50	API 3 Cup	0658-3001-10	0628-3307-X0
3-1/2"	1.75	API 3 Cup	0658-3001-10	0628-3508-X0
3-1/2"	2.25	API 3 Cup	0658-3001-10	0628-3708-X0

MATERIAL CODES	
41X0	2
304 SS	3
NCA 400	5
PTFE Steel	6
Boronized Steel	8

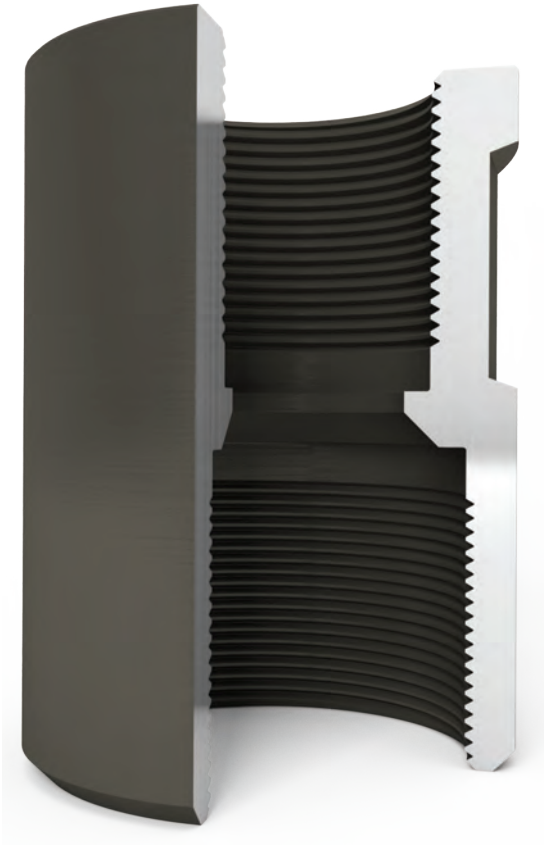

BOTTOM SIMPLEX HOLD DOWN

The fitting is used with the Simplex Mechanical Bottom Lock Hold-Down assembly. It connects to the mandrel and holds the bottom lock sleeve in place. The lower end incorporates a pipe thread connection for a strainer nipple or gas anchor.

Hold Down Size	Bottom Thread Connection	Part Numbers
2-3/8"	1" Line Pipe	0658-1025-21
2-7/8"	1-1/4" Line Pipe	0658-2025-20
3-1/2"	1-1/2" Line pipe	0658-3025-20

All couplings shown in steel material.

BOTTOM HOLD DOWN, SEATING CUP

Hold Down Size	Bottom Thread Connection	API Numbers	Part Numbers
1.900	3/4" Line Pipe	—	0658-7006-X0
2.063	3/4" Line Pipe	—	0658-8006-X0
2-3/8"	1" Line Pipe	S16-20	0658-1006-X0
2-7/8"	1-1/4" Line Pipe	S16-25	0658-2006-X0
3-1/2"	1-1/2" Line Pipe	S16-30	0658-3006-X0

MATERIAL CODES	
10XX	1
41X0	2
304 SS	3
Brass	4
NCA 400	5
PTFE Steel	6
316 SS	7

PORTED, PULL TUBE TO PIN END PLUNGER

Description		
Plunger Size	Pull Tube Size	Part Number
1-1/4"	15/16"	0628-1312-X0
1-1/2"	15/16"	0628-1315-X1
1-1/2"	1-1/8"	0628-1315-X0
1-3/4"	1-1/8"	0628-1317-X1
1-3/4"	1-1/2"	0628-1317-X0
2"	1-1/8"	0628-1320-X1
2"	1-1/2"	0628-1320-X0 *
2-1/4"	1-1/2"	0628-1322-X0
2-1/2"	1-1/2"	0628-1325-X3
2-1/2"	1-7/8"	0628-1325-X1
2-3/4"	1-7/8"	0628-1327-X0
3-1/4"	2-3/8"	0628-1332-X0
3-3/4"	2-3/8"	0628-1337-X0

* Also available in NCA K500 with the last 2 digits -55.

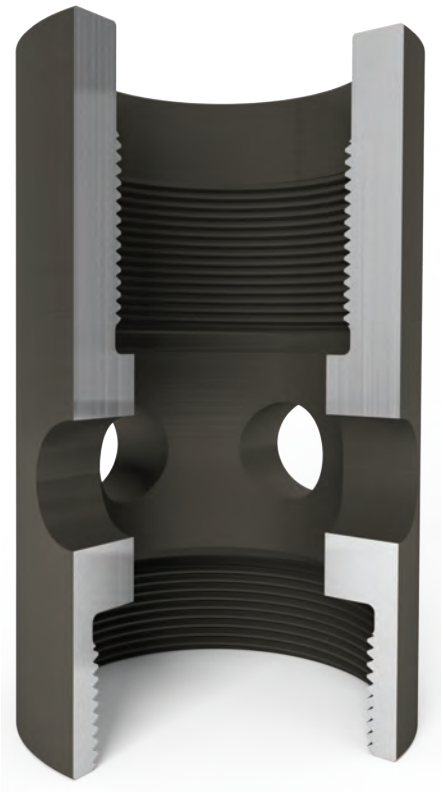

PORTED, PULL TUBE TO BOX END PLUNGER

Description		
Plunger Size	Pull Tube Size	Part Number
2-1/2"	1-1/2"	0628-1325-X0
2-1/2"	1-7/8"	0628-1325-X4

MATERIAL CODES	
41X0	2
304 SS	3
Brass	4
NCA 400	5
PTFE Steel	6
316 SS	7

VALVE ROD TO PIN END PLUNGER

The coupling is a 3-wing open plunger coupling and may be used instead of a cage. The upper end is threaded for an API valve rod and is designed with a deep counter-bore and a tight rod clearance to reduce bending moments in the thread area; and the lower thread connects to a pin-end plunger.

Plunger	Valve Rod	Part Numbers
1-1/4"	11/16"	0628-4712-X0
1-1/4"	7/8"	0628-4712-X1
1-1/2"	11/16"	0628-4715-X0
1-1/2"	7/8"	0628-4715-X1
1-3/4"	7/8"	0628-4717-X0
1-3/4"	1-1/16"	0628-4717-X1
2"	7/8"	0628-4720-X0
2"	1-1/16"	0628-4720-X1
2-1/4"	1-1/16"	0628-4722-X1
2-1/2"	1-1/16"	0628-4725-X1

VALVE ROD TO PIN END PLUNGER, LONG BORE

The coupling is a 3-wing open plunger coupling and may be used instead of a cage. The upper end is threaded for an API valve rod and is designed with a deeper counter-bore (2.19" long instead of .75") and a tight rod clearance to reduce bending moments in the thread area; and the lower thread connects to a pin-end plunger

Plunger	Valve Rod	Part Numbers
1-1/2"	11/16"	0628-4715-X7
1-1/2"	7/8"	0628-4715-X8
1-3/4"	7/8"	0628-4717-X7
1-3/4"	1-1/16"	0628-4717-X8
2"	7/8"	0628-4720-X7
2"	1-1/16"	0628-4720-X8

MATERIAL CODES	
41X0	2
304 SS	3
NCA 400	5
PTFE	6
316 SS	7

VALVE ROD TO PIN END PLUNGER, COLLET TYPE

Size		Coupling	Nut
Plunger	Valve Rod		
1-1/2"	7/8"	~~0628-4715-X1~~	0638-4801-1X
1-3/4"	7/8"	0628-4817-X0	0638-4802-0X
2"	7/8"	0628-4820-X0	0638-4802-0X
2"	1-1/16"	0628-4820-X1	0638-4803-0X
2-1/4"	1-1/16"	0628-4822-X1	0638-4803-0X
2-1/2"	1-1/16"	~~0628-4725-X1~~	0638-4803-0X

0628-4825-X1

0628-4815-X1

MATERIAL CODES	
41X0	2
304 SS	3
NCA 400	5
PTFE	6
316 SS	7

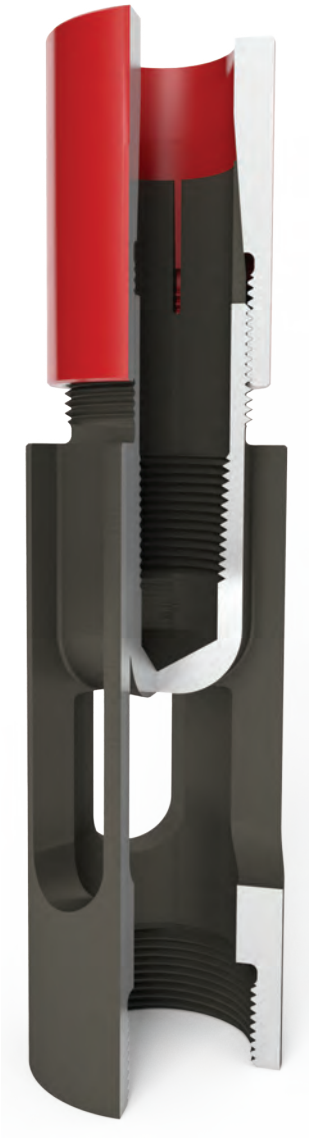

VALVE ROD TO BOX END PLUNGER

Plunger	Valve Rod	Notes	Part Numbers
1-1/2"	11/16"	—	0628-7215-X0
2"	7/8"	—	0628-7220-X0
2"	7/8"	Reduced Neck OD 1.38	0628-4720-X3
2"	1-1/16"	—	0628-7320-X0
2-1/4"	1-1/16"	—	0628-7322-X0
2-1/2"	1-1/16"	—	0699-8598-X0
2-3/4"	1-1/16"	—	0628-7327-X0
3-1/4"	1-1/16"	Reduced Neck OD 2.00	0628-7332-X0
3-3/4"	1-1/16"	Reduced Neck OD 2.00	0628-7337-X0

MATERIAL CODES	
41X0	2
304 SS	3
Brass	4
NCA 400	5
PTFE Steel	6
316 SS	7

SPIRAL CENTRALIZER GUIDE

Size					Part Numbers		Fish Neck Dims		
Tubing	O.D.	API Sucker Rod Box	Spiral Length	Overall Length	41X0	Spray Metal Coated	A	B	C
2-3/8"	1.820"	3/4"	3.87"	9.00"	0699-8012-24	0628-1012-24	1.500"	1.375"	3.75"
2-7/8"	2.330"	3/4"	3.87"	9.00"	0699-8022-24	0628-1022-24	1.812"	1.625"	3.75"
2-7/8"	2.330"	7/8"	3.87"	9.00"	—	0628-1022-25	1.812"	1.625"	3.75"
3-1/2"	2.850"	7/8"	3.87"	9.00"	0699-8032-25	0628-1032-25	1.812"	1.687"	3.75"
4-1/2"	3.745"	7/8"	3.87"	9.00"	0699-1045-25	—	2.000"	1.875"	4.50"

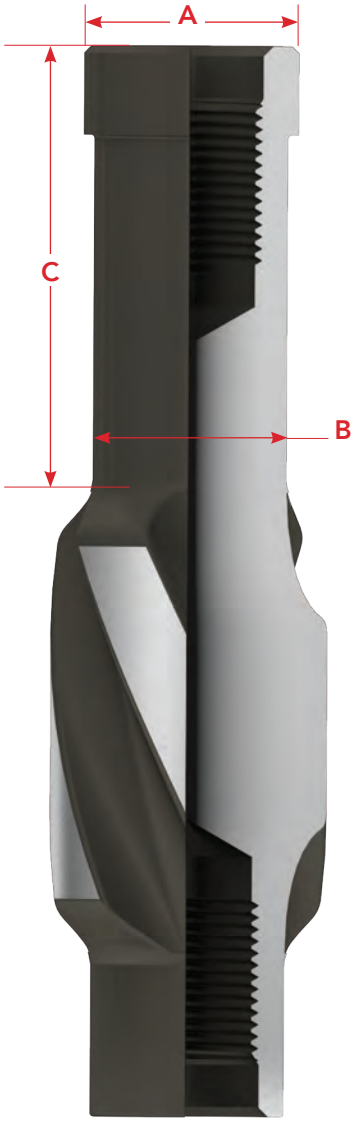

HSF SPIRAL CENTRALIZERS

Size						Part Numbers	Fishing Neck Dims		
Tubing	OD	Upper API SR Connection	Lower API SR Connection	Spiral Length	Overall Length	41X0 HSF	A	B	C
2-3/8"	1.820"	3/4"	3/4"	3.87"	9.00"	0628-2112-24	1.500"	1.375"	3.75"
2-7/8"	2.330"	3/4"	3/4"	3.87"	9.00"	0628-2122-24	1.812"	1.625"	3.75"
2-7/8"	2.330"	7/8"	7/8"	3.87"	9.00"	0628-2122-25	1.812"	1.625"	3.75"
3-1/2"	2.850"	7/8"	7/8"	3.87"	9.00"	0628-2132-25	1.812"	1.687"	3.75"

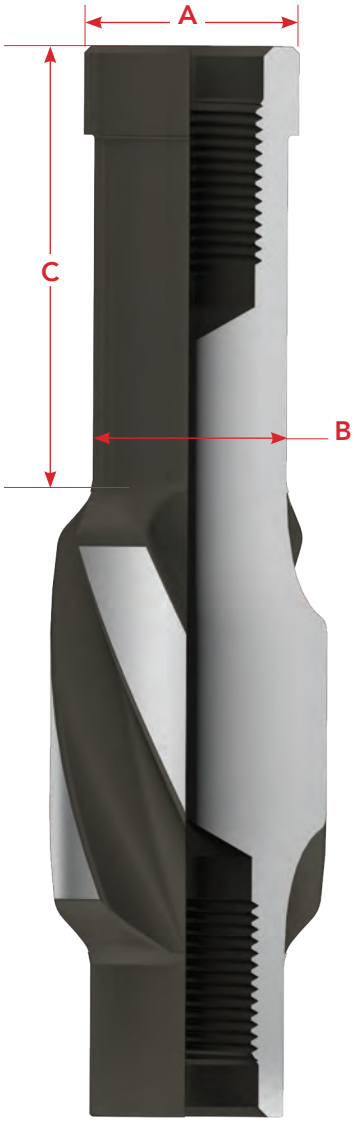

SUCKER ROD, CLASS SM

Rod Size	API Box Threads	Coupling Size			Part Number	
		OD	Length	Style	Standard	HSF
3/4"	1-1/16"	1-5/8"	4"	Full Size	0603-9477-00	0603-9477-08
7/8"	1-3/16"	1-13/16"	4"	Full Size	0603-9577-00	0603-9577-08
7/8"	1-3/16"	1-5/8"	4"	Slim Hole	0603-9558-00	0603-9558-08
1"	1-3/8"	2-3/16"	4"	Full Size	0603-9677-00	0603-9677-08
1"	1-3/8"	2"	4"	Slim Hole	0603-9678-00	0603-9678-08

SUCKER ROD COUPLINGS, CLASS T

Rod Size	API Box Threads	Coupling Size			Part Number
		OD	Length	Style	
5/8"	15/16"	1-1/2"	4"	Full Size	0603-9373-00
3/4"	1-1/16"	1-5/8"	4"	Full Size	0603-9473-00
7/8"	1-3/16"	1-5/8"	4"	Slim Hole	0603-9554-00
7/8"	1-3/16"	1-13/16"	4"	Full Size	0603-9573-00
1"	1-3/8"	2"	4"	Slim Hole	0603-9674-00

Sucker Rod, Class SM

Sucker Rod Couplings, Class T

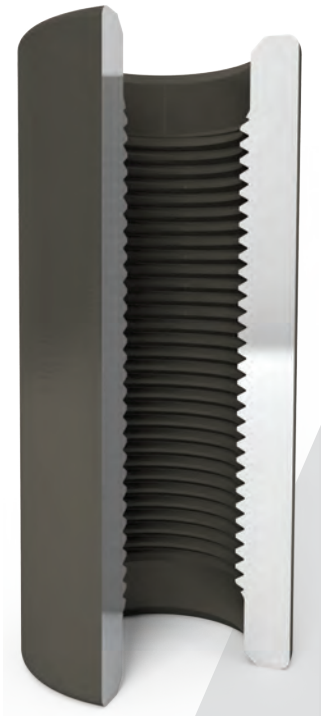

SUB-COUPLINGS, CLASS SM

Upper Rod Size	API Box Threads	Lower Box Rod Size	API Box Threads	Coupling Size			Part Number	
				OD	Length	Style	Standard	HSF
3/4"	1-1/16"	7/8"	1-3/16"	1-5/8"	4"	Slim Hole	0603-5430-00	—
3/4"	1-1/16"	7/8"	1-3/16"	1-13/16"	4"	Full Size	0603-5141-27	0603-5141-28
7/8"	1-3/16"	1"	1-3/8"	2"	4"	Slim Hole	0603-6151-17	0603-6151-18
7/8"	1-3/16"	1-1/8"	1-9/16"	2-1/4"	5"	Slim Hole	—	0603-7151-08
1"	1-3/8"	1-1/8"	1-9/16"	2-1/4"	5"	Slim Hole	—	0603-7161-08

SUB-COUPLING, CLASS T

Upper Rod Size	API Box Threads	Lower Box Rod Size	API Box Threads	Coupling Size			Part Number
				OD	Length	Style	
3/4"	1-1/16"	5/8"	15/16"	1-5/8"	4"	Full Size	0603-5306-00
3/4"	1-1/16"	7/8"	1-3/16"	1-5/8"	4"	Slim Hole	0603-5409-00
7/8"	1-3/16"	1"	1-3/8"	2"	4"	Slim Hole	0603-5515-00

Sub-Couplings, Class SM

Sub-Couplings, Class T

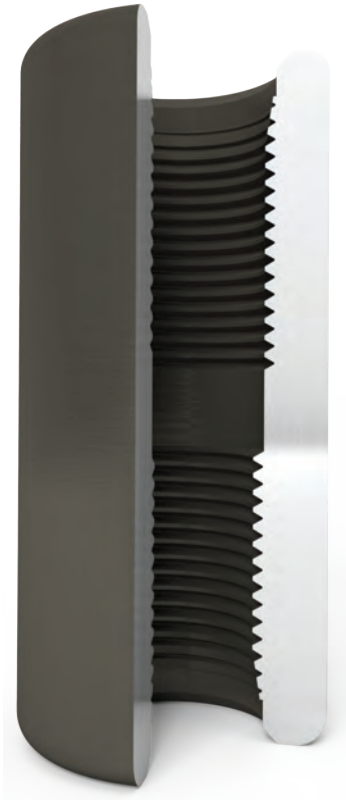

HSF

Why High Surface Finish (HSF)?

Spray metal components with High Surface Finish* have been proven by extensive field trials to significantly reduce abrasive tubing wear

-A typical spray metal coupling is Ra 30 µin [0.76 µm]

-API 11B specifies surface finish shall not exceed 63 Ra µin [1.60 µm]

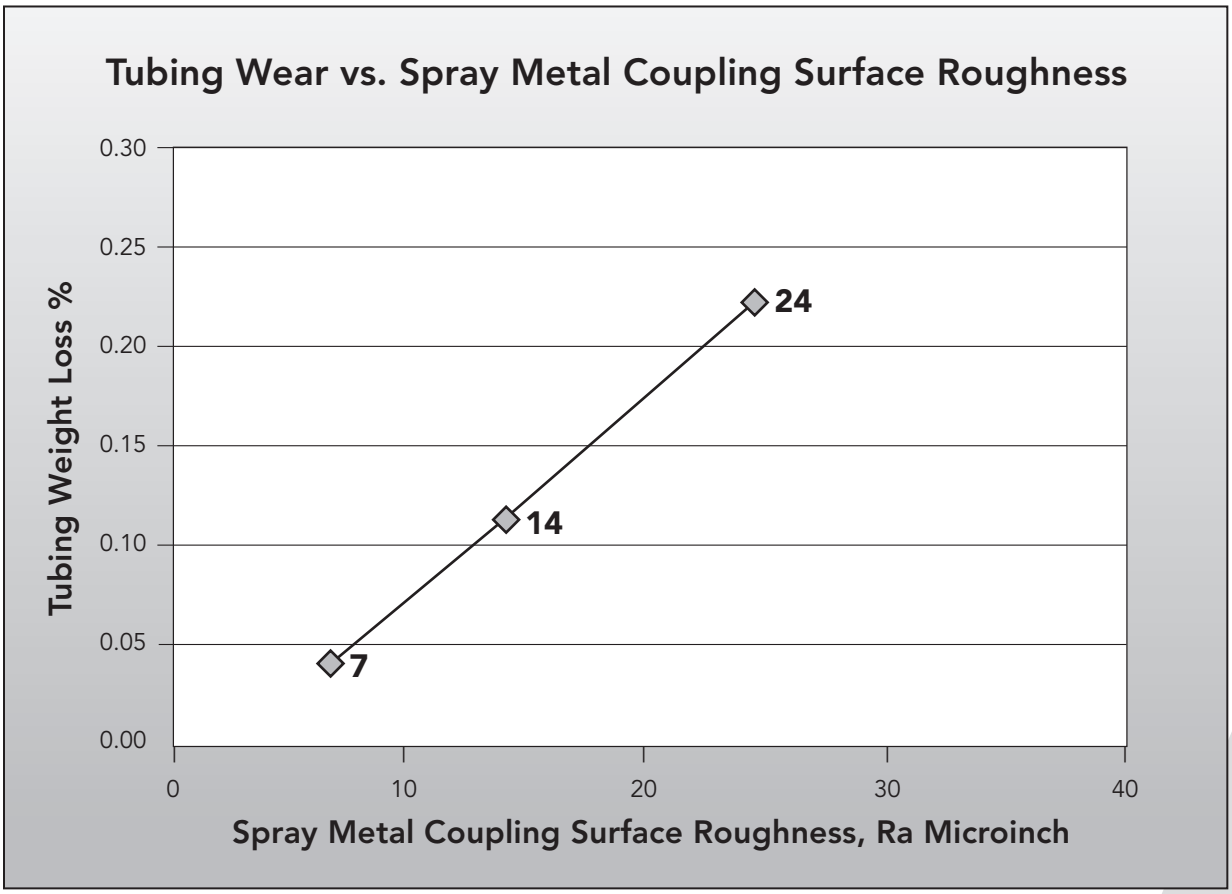

Data from controlled laboratory tests

*High Surface Finish is defined as better than Ra 8 µin [Ra 0.20 µm]

SURFACE FINISH COMPARISON

Surface finish measurements from standard spray metal (left) and High Surface Finish spray metal sucker-rod coupling (right).

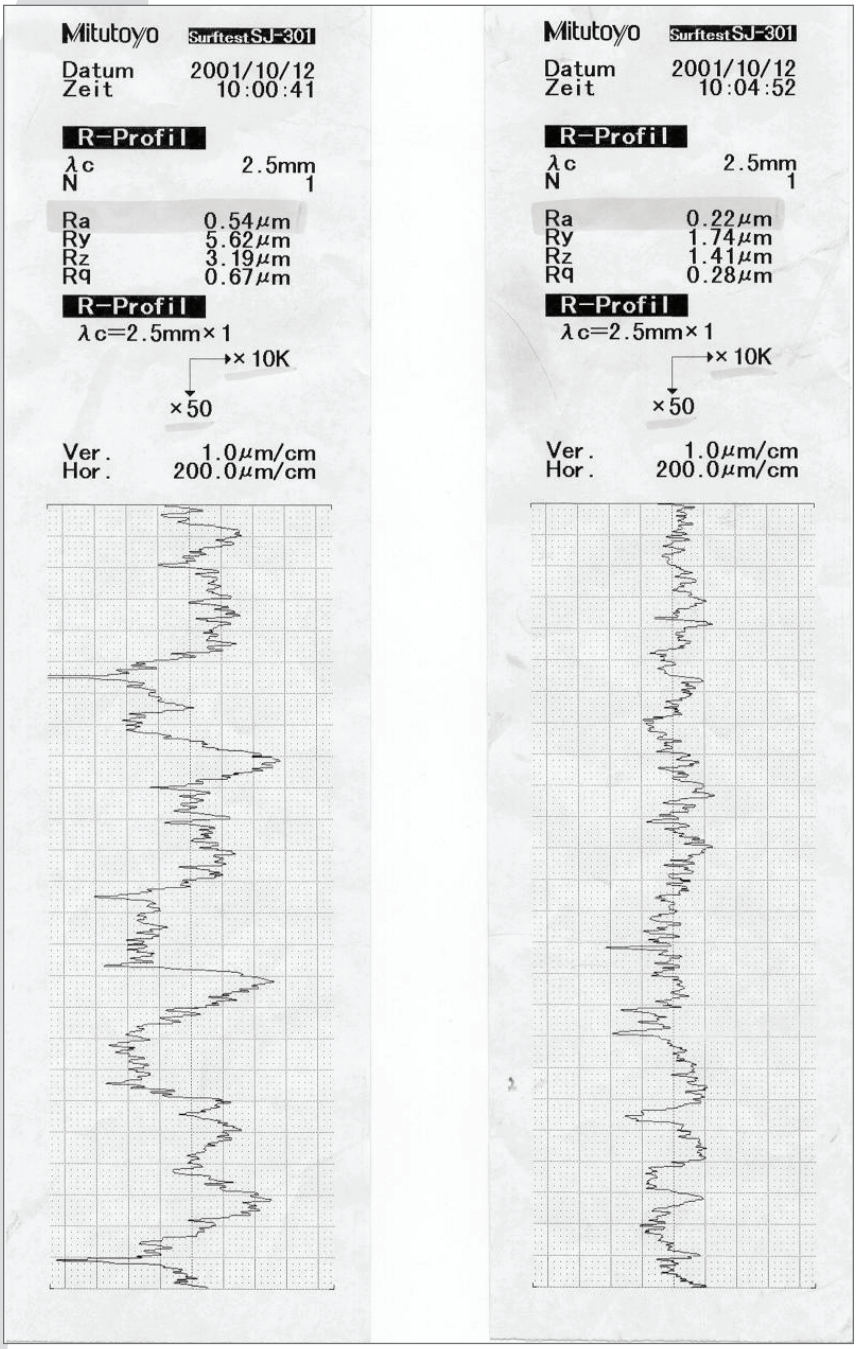

Ra = 0.54 vs Ra = 0.22 micrometre
Ra = 22 vs Ra = 9 microinch

The hardness of a common metal file is approximately HRC 60-61.
The hardness of a common metal sprayed coupling is HRC 56-62.

HSF SPRAY METAL COUPLINGS

Spray Metal components with High Surface Finish* have been proven by extensive field trials to significantly reduce abrasive tubing wear.

APPLICATION
- Sucker rod coupling

BENEFIT
- Low friction greatly reduces tubing wear

FEATURES
- 8 Ra µin [0.20 Ra µm] OD finish
- Corrosion resistant OD

Spray Metal Sucker Rod couplings, manufactured with surface finish better than Ra 8 µin [Ra 0.20 µm], have been demonstrated to significantly extend well run lives, compared to either standard Class T couplings, or spray metal couplings with typical surface finish. API 11B specifies surface finish shall not exceed 63 Ra µin [1.60 µm].

DESCRIPTION AND OPERATION

High Surface Finish Spray Metal Couplings reduce wear and friction, and reduce rod hang-up.

Available in standard API Sucker Rod coupling and Sub-coupling sizes.

Coupling Size	OD
3/4 in [19.05mm]	Fullsize or Slimhole
7/8 in [22.23mm]	Fullsize or Slimhole
1 in [25.40mm]	Fullsize or Slimhole

*High Surface Finish is defined as better than Ra 8 µin [Ra 0.20 µm].

HSF CENTRALIZERS

Spray Metal components with High Surface Finish* have been proven by extensive field trials to significantly reduce abrasive tubing wear.

APPLICATION
- Centralizing sucker-rod string

BENEFIT
- Prevent rod string from buckling
- Low friction greatly reduces tubing wear

FEATURES
- 8 Ra µin [0.20 Ra µm] OD finish
- Corrosion resistant OD

Spray Metal Sucker Rod components, manufactured with surface finish better than Ra 8 µin [Ra 0.20 µm], have been demonstrated to significantly extend well run lives, compared to either standard Class T couplings, or spray metal couplings with typical surface finish. API 11B specifies surface finish shall not exceed 63 Ra µin [1.60 µm].

DESCRIPTION AND OPERATION

The High Surface Finish Spray Metal Centralizers allow a large flow area to reduce pressure drop. Reduced wear and friction reduces rod hang-up..

Available in standard and customized sizes and lengths to suit application.

Tubing Size	Connections
2.375 [60.3mm]	API SR Pin or Box
2.875 [73.0mm]	API SR Pin or Box
3.500 [88.9mm]	API SR Pin or Box
4.500 [114.3mm]	API SR Pin or Box

*High Surface Finish is defined as better than Ra 8 µin [Ra 0.20 µm].

BARREL COUPLINGS

Type	O.D.	Barrel Size	Part Number
RH to RH	2.260"	1.50"	0628-5515-X0
RH to RH	2.260"	1.75"	0628-5517-X0
RH to RH	2.760"	2.25"	0628-5522-X0
TH to TH	3.188"	2.25"	0628-5422-X0
TH to TH	3.688"	2.75"	0628-5427-X0
RX to RX *	4.250"	3.25"	0628-5532-X0

MATERIAL CODES	
41X0	2
443B	4
NCA 400	5
PTFE Steel	6

* Requires barrel to be rethreaded

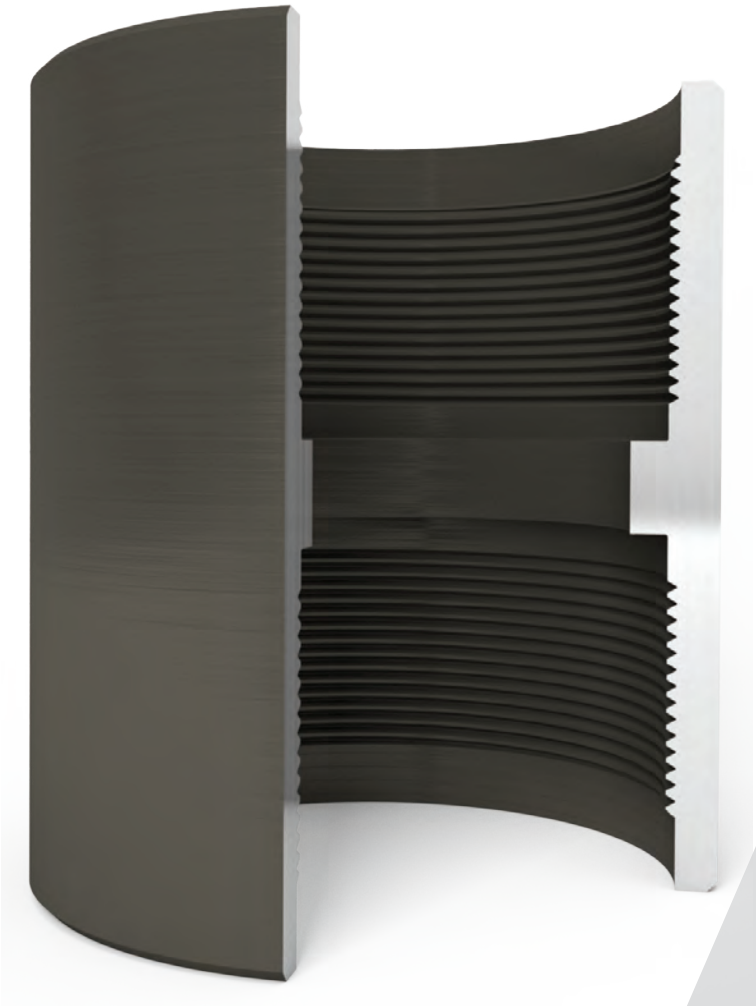

CUPS

Dura Products™
A DISTRIBUTION NOW® COMPANY

TYPE HR CUPS, ROD INSERT PUMP, 3 CUP HOLD DOWN

Tubing	Cup O.D.	Cup I.D.	Part Number	API	Material	Fits Mandrel	Seating Nipple
2-3/8"	1-25/32" +30	1.190"	2231-0110-80	S12-20	Composite	0658-1001-10	0636-1210-12
2-3/8"	1-25/32" +30	1.190"	2231-1462-30	S12-20	Nylon	0658-1001-10	0636-1210-12
2-3/8"	1-25/32" +60	1.190"	2231-2102-60	—	Composite	0659-1066-10	OTIS
2-3/8"	1-7/8" +30	1.190"	2231-0976-40	—	Composite	0659-1066-10	OTIS
2-7/8"	2-1/4" +30	1.563"	2231-8004-25	—	Composite	0659-2066-10	F NIPPLE OR 2-1/4" Barrel
	2-1/4" +70	1.563"	2231-0114-10	S12-25	Composite	0658-2001-10	0636-1220-12
2-7/8"	2-1/4" +70	1.563"	2231-1618-70	S12-25	Nylon	0658-2001-10	0636-1220-12
2-7/8"	2-1/4" +90	1.563"	2231-1204-10	—	Composite	0659-2066-10	OTIS
2-7/8"	2-1/4" +90	1.563"	2231-8000-30	—	Nylon	0659-2066-10	OTIS
3-1/2"	2-3/4" +70	2.000"	2231-0906-10	S12-30	Composite	0658-3001-10	0636-1230-12
3-1/2"	2-3/4" +70	2.000"	2231-2226-20	S12-30	Nylon	0658-3001-10	0636-1230-12

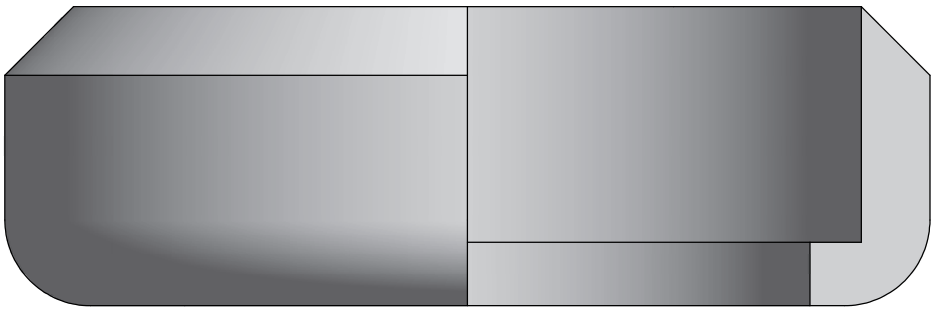

TYPE HR CUPS, TUBING PUMP STANDING VALVE, 2 CUP HOLD DOWN

Tubing	Cup O.D.	Cup I.D.	Part Number	API	Material	Fits Mandrel	Seating Nipple
2-3/8"	1-3/4" -10	1.190"	2231-0168-30	S18-20	Composite	0658-1756-10	0636-1410-15
2-3/8"	1-3/4" -10	1.190"	2231-0168-70	S18-20	Nylon	0658-1756-10	0636-1410-15
2-7/8"	2-1/4" -10	1.563"	2231-0168-60	S18-25	Composite	0658-2256-10	0636-1420-15
3-1/2"	2-3/4" -10	2.000"	2231-0785-90	S18-30	Composite	0658-2756-10	0636-1430-15

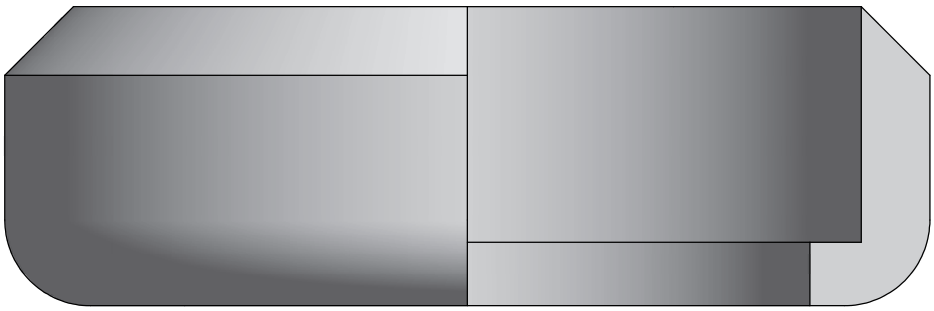

TYPE HR CUPS, DUPLEX HOLD DOWN

Tubing	Cup O.D.	Cup I.D.	Part Number	Material	Fits Mandrel	Seating Nipple
2-3/8"	1-25/32" +30	1.25"	2231-1685-40	Composite	0658-1058-10	0636-1210-12
2-7/8"	2-1/4" +70	1.75"	2231-1685-20	Composite	0658-2058-10	0636-1220-12

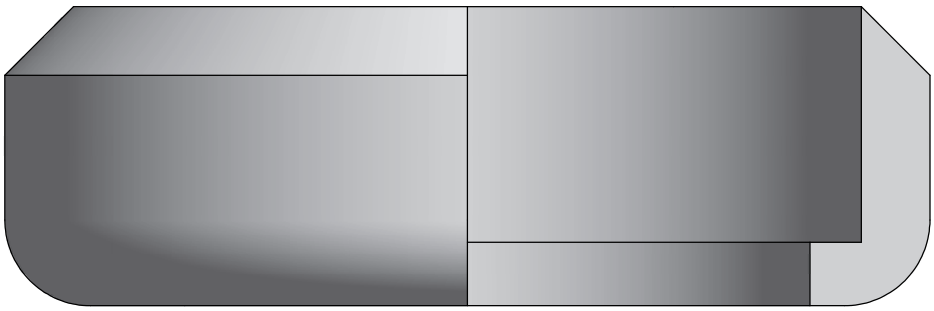

TYPE O CUPS, ROD INSERT PUMP

Tubing	Cup O.D.	Cup I.D.	Part Number	Material	Fits Mandrel	Seating Nipple
1.900"	1-1/2" -10	1.125"	2231-1057-00	Composite	0658-7001-11	0636-1270-13
2-3/8"	1-3/4" +70	1.440"	2231-2105-80	Composite	0699-8604-20	Pacific
2-3/8"	1-3/4" +70	1.440"	2231-2105-85	Plastic	0699-8604-20	Pacific
2-3/8"	1-7/8" +30	1.456"	2231-1895-00	Plastic	0699-8707-10	OTIS, X, XN
2-3/8"	1-7/8" +30	1.456"	2231-1895-10	Composite	0699-8707-10	OTIS, X, XN
2-7/8"	2-1/4" +70	1.805"	2231-2103-00	Composite	0699-8591-20	Pacific
2-7/8"	2-1/4" +70	1.973"	2231-8003-45	Composite	0699-8615-20	0636-1220-12
2-7/8"	2-1/4" +70	1.973"	2231-8003-46	Nylon	0699-8615-20	0636-1220-12

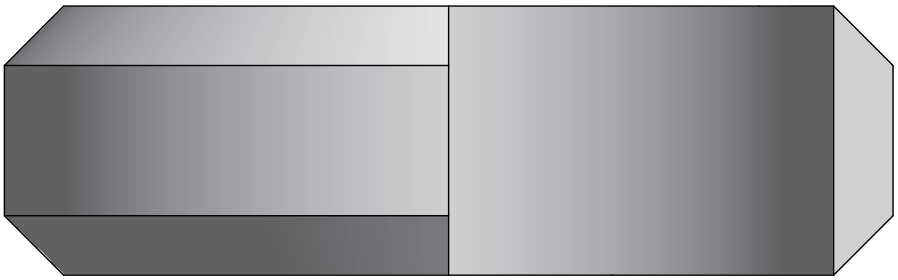

CUP PLUNGER, WOOD TYPE

Size	Tolerance	Material	Part Number
1.50"	-15	Plastic	2231-1406-10
1.50"	-30	Plastic	2231-1406-11
1.75"	-15	Plastic	2231-1735-00
1.75"	-30	Plastic	2231-1735-30
2.00"	-15	Plastic	2231-8001-40
2.00"	-30	Plastic	2231-8001-30
2.25"	-15	Plastic	2231-8003-60
2.25"	-30	Plastic	2231-8003-30
2.50"	-30	Plastic	2231-2501-30

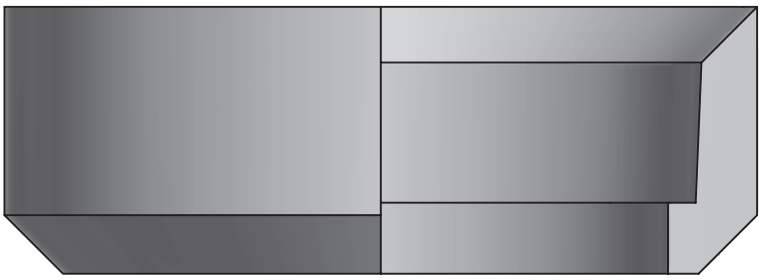

TUBING DRAIN

Dura Products™
A DISTRIBUTION NOW® COMPANY

TUBING DRAIN

Tubing	O.D.	I.D.	Length	Assembly	A Body	B Sleeve	C O-Ring Kit*	D Shear Pin
2-3/8"	3.438"	1.938"	11.50"	0698-1055-00	0698-1055-10	0698-1055-20	0699-2003-20	0698-1055-30
2-7/8"	3.875"	2.480"	12.00"	0698-1058-00	0698-1058-10	0698-1058-20	0699-2015-20	0698-1055-30
2-7/8"	3.875"	2.480"	12.00"	0698-1058-01[1]	0698-1058-10	0698-1058-21	0699-2015-20	0698-1055-30
3-1/2"	4.500"	2.938"	13.50"	0698-1090-00	0698-1090-10	0698-1090-20	0699-2025-20	0698-1055-30

*Note: O-Ring kit consists of O-Rings and backup rings.
1 - 7,000 psi assembly supplied with sleeve and 8 shear screws.

SHEAR PIN VALUES (PSI)

Tubing	Piston Area	1	2	3	4	5	6	7	8
2-3/8"	2.26 in^2	1,085	2,170	3,255	4,340	5,425	6,510	—	—
2-7/8"	2.65 in^2	925	1,850	2,775	3,700	4,625	5,550	6,475	7,400
3-1/2"	3.06 in^2	800	1,600	2,400	3,200	4,000	4,800	—	—

FIN SEAL

Dura Products™
A DISTRIBUTION NOW™ COMPANY

FIN SEAL

Tubing Size O.D.	Pump Barrel Size	Mandrel	I.D.	Fin Element
2-3/8"	1-1/2" RW, 1-1/4" RH	0699-8664-10	1.00	0658-8010-40
2-7/8"	1-1/2" RW, 1-1/4" RH	0699-8663-11	1.00	0658-8015-40
2-7/8"	2" RW, 1-1/2" RH, 1-3/4" RH	0699-8663-10	1.25	0658-8015-40

GUIDES

Dura Products™
A DISTRIBUTION NOW™ COMPANY

PULL TUBE, BOX END, TOP HOLD DOWN

Tubing	Pull Tube	Thread	Steel	Boronized Steel	For Mandrel	Fishing Neck Dimensions			
						A	B	C	I.D.
2-3/8"	15/16"	16 BOX	0699-8705-10	0699-8705-80	0699-8707-10	1.625	1.500	3.19	1.00
2-3/8"	1-1/8"	16 BOX	0699-8706-10	0699-8706-80	0699-8707-10	1.625	1.500	3.19	1.16
2-7/8"	15/16"	14 BOX	0658-2026-16	0658-2026-86	0658-2001-10	1.625	1.500	3.19	1.00
2-7/8"	1-1/8"	14 BOX	0658-2026-17	0658-2028-27	0658-2001-10	1.625	1.500	3.19	1.19
2-7/8"	1-1/2"	14 BOX	0658-2090-21	0658-2090-81	0699-8615-20	2.000	1.875	3.00	1.56
3-1/2"	1-1/8"	11-1/2 BOX	0658-3090-23	—	0658-3001-10	2.000	1.875	3.00	1.19
3-1/2"	1-1/2"	11-1/2 BOX	0658-3090-21	0658-3090-81	0658-3001-10	2.000	1.875	3.00	1.56

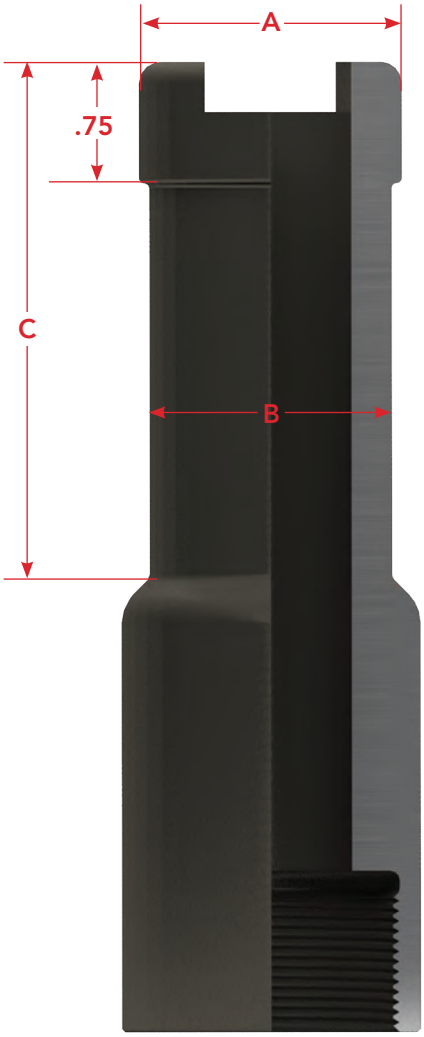

PULL TUBE, PIN END, BOTTOM HOLD DOWN

Tubing	Pull Tube	Thread	Steel	Boronized Steel	For Barrel	Fishing Neck Dimensions			
						A	B	C	I.D.
2-3/8"	1-1/8"	16 PIN	0658-1090-20	0658-1090-70	1.50 RW	1.500	1.375	2.94	1.17
2-3/8"	15/16"	16 PIN	0658-1090-21	0658-1090-81	1.25 RW	1.250	1.187	2.94	0.98
2-3/8"	15/16"	16 PIN	0658-1091-21	0658-1091-81	1.25 RH	1.500	1.375	2.94	0.98
2-7/8"	1-1/8"	16 PIN	0658-1091-20	0658-1091-70	1.50 RH	2.000	1.875	3.00	1.17
2-7/8"	1-1/2"	16 PIN	0658-2090-20	0658-2090-70	2.00 RW / 1.75 RH	2.000	1.875	3.00	1.56
3-1/2"	1-7/8"	16 PIN	0658-3090-20	—	2.50 RW	2.375	2.250	3.00	1.94

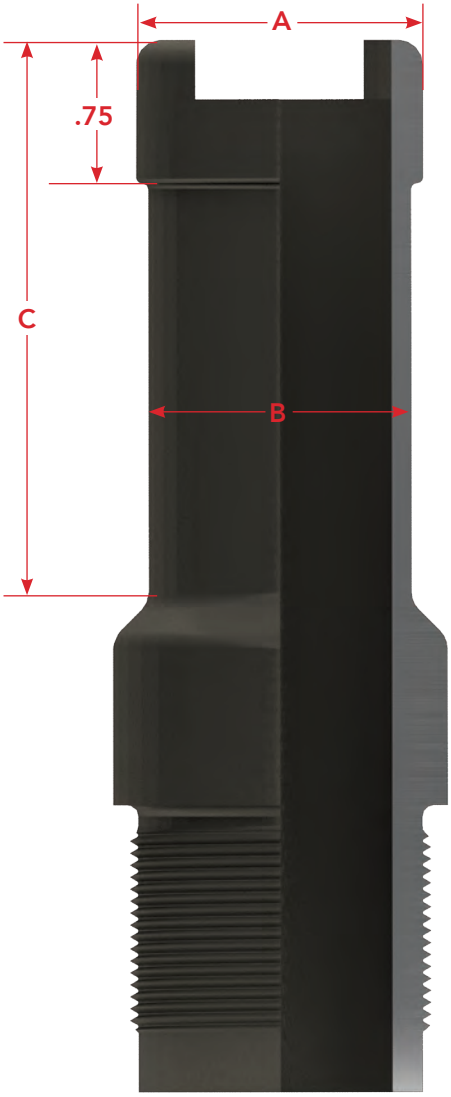

PULL TUBE, BOX & PIN END, LONG, BOTTOM HOLD-DOWN

Tubing	Pull Tube	Thread	Boronized Steel	For Barrel	Fishing Neck Dimensions			
					A	B	C	I.D.
2-3/8"	15/16"	16 BOX	0658-2101-80	1.25 RH	1.500	1.375	7.00	0.98
2-7/8"	1-1/8"	16 BOX	0658-2102-80	1.50 RH	2.000	1.875	7.00	1.19
2-7/8"	1-1/2"	16 BOX	0658-2103-80	1.75 RH	2.000	1.875	7.00	1.56
2-7/8"	1-1/2"	16 PIN	0658-2091-85	2.00 RW	2.000	1.875	7.00	1.56

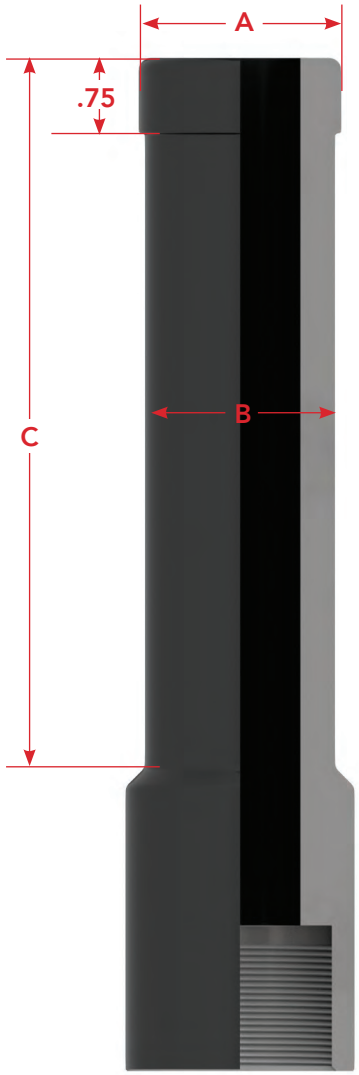

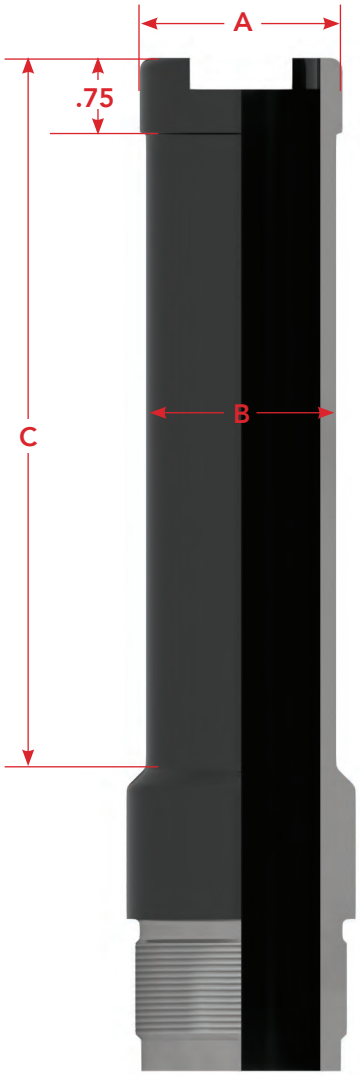

TWO STAGE, PIN END, BOTTOM HOLD DOWN

Tubing Size	Two Stage		Thread Type	Part Number	OD	Fish Neck Dims			
	RH	RW				A	B	C	I.D.
2-3/8"	1-1/4"	1-1/2"	16 PIN	0639-1511-X0	1.875"	1.625	1.500	5.00	1.125
2-7/8"	1-1/4"	1-1/2"	16 PIN	0639-1511-X1	2.312"	1.625	1.500	5.00	1.125
2-7/8"	1-3/4"	2"	16 PIN	0639-1512-X1	2.250"	2.000	1.875	5.00	1.265

MATERIAL CODES	
10XX	1
41X0	2
304 SS	3
NCA 400	5

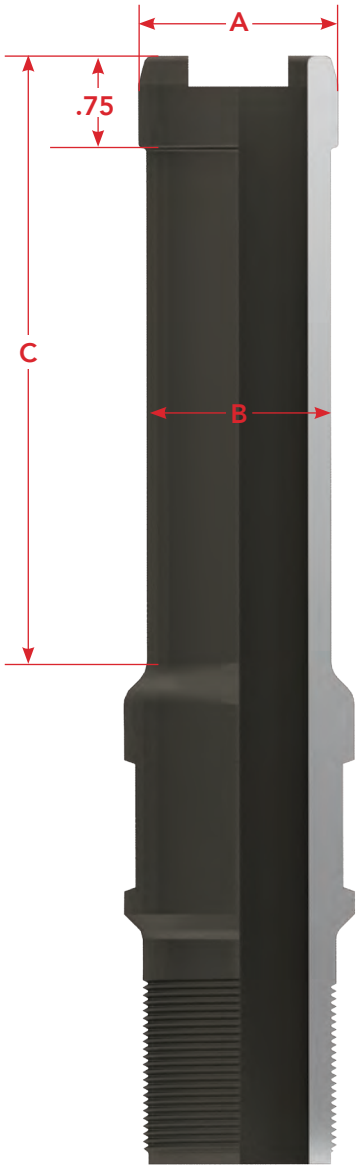

VALVE ROD, BOX END

#	Tubing	Valve Rod	Thread	API	Steel	Stainless Steel	PTFE	Boronized Steel
1	2.063"	11/16"	14 BOX	G11-15	0658-8026-20	—	—	—
2	2-3/8"	11/16"	14 BOX	G11-20	0658-1026-20	0658-1026-30	0658-1026-60	0658-1026-80
3	2-3/8"	7/8"		—	0658-1026-21	0658-1026-31	—	—
4	2-7/8"	11/16"	14 BOX	—	0658-2026-18	—	—	—
5	2-7/8"	7/8"	14 BOX	G11-25	0658-2026-20	—	0658-2026-60	0658-2026-80
6	2-7/8"	1-1/16"		—	0658-2026-21	—	—	0658-2026-81
7	3-1/2"	1-1/16"	11-1/2 BOX	G11-30	0658-3026-20	0658-3026-30	—	—

#	Fishing Neck Dims			
	A	B	C	I.D.
1	1.250	1.125	2.90	0.704
2	1.500	1.375	2.92	0.704
3	1.500	1.375	2.94	0.891
4	1.625	1.500	3.17	0.704
5	1.625	1.500	3.17	0.891
6	1.625	1.500	3.17	1.079
7	1.625	1.500	3.25	1.079

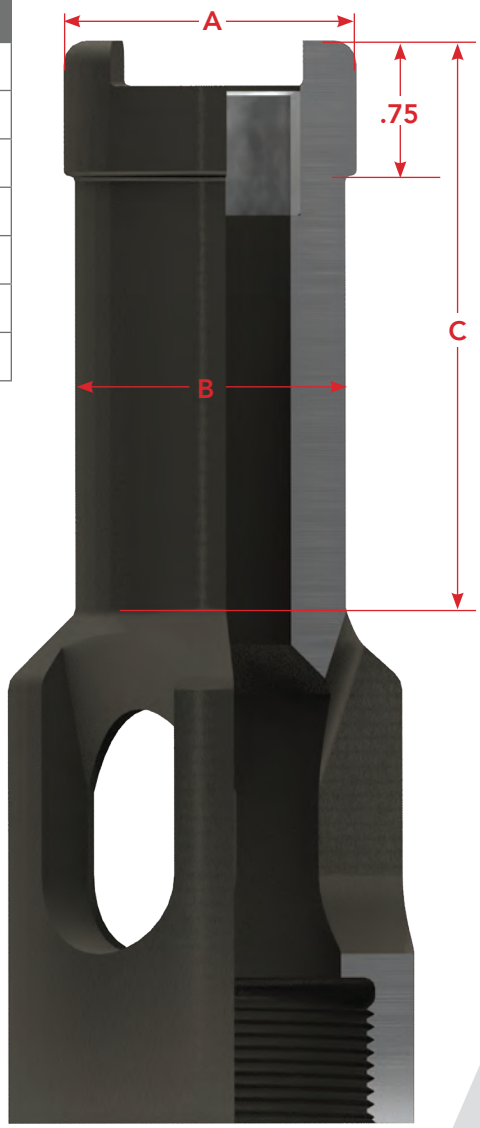

VALVE ROD, BOX END, STAINLESS STEEL W/HARD STAINLESS STEEL INSERT

#	Size				
	Tubing	Valve Rod	Thread	API	Stainless Steel
1	2-7/8"	7/8"	14 BOX	G11-25	0658-2026-30
2	2-7/8"	1-1/16"		—	0658-2026-31

#	Fishing Neck Dims			
	A	B	C	I.D.
1	1.625	1.500	3.17	0.891
2	1.625	1.500	3.17	1.079

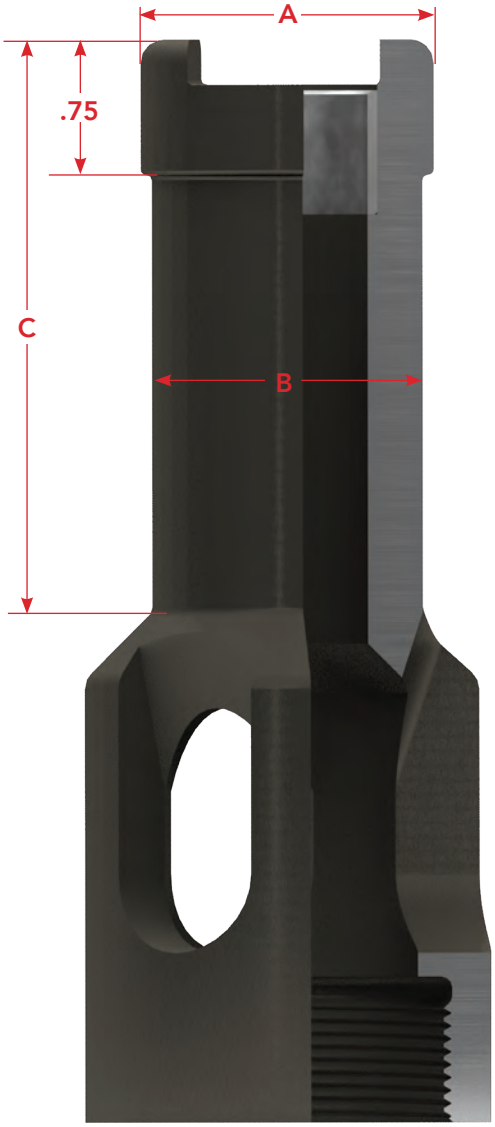

VALVE ROD GUIDE, SLIM HOLE, FOR RW PUMP

#	Size			Part Numbers		
	Tubing	Valve Rod	Thread	API	Steel	Boronized Steel
1	1.900"	11/16"	1.3330-16 UNS-3A	—	0658-7026-20	0658-7026-80
2	2-3/8"	11/16"	1.5730-16 UNS-3A	-	0659-1028-20	0659-1028-80
3	2-7/8"	7/8"	2.0870-16 UNS-3A	-	0659-2028-20	0659-2028-80

#	Fishing Neck Dims			
	A	B	C	I.D.
1	1.250	1.125	2.94	0.704
2	1.500	1.375	2.94	0.704
3	1.625	1.500	3.17	0.891

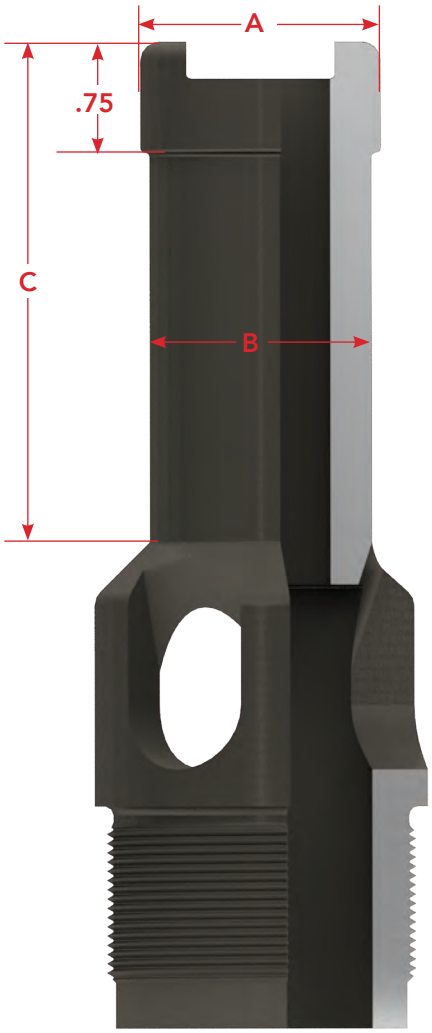

VALVE ROD, BOX END, SPOOL CHECK

#	Size			Steel	Stainless Steel	Monel	Boronized Steel
	Tubing	Valve Rod	Thread				
1	2-3/8"	11/16"	14 BOX	0658-1026-26	0658-1026-36	—	0658-1026-86
2	2-3/8"	7/8"	14 BOX	0658-1026-27	—	—	—
3	2-7/8"	7/8"	14 BOX	0658-2026-27	0658-2026-37[1]	0658-2026-57[1]	0658-2026-87

1- Guide with Hard Stainless Steel wear ring.

#	Fishing Neck Dims			
	A	B	C	I.D.
1	1.500	1.375	2.94	0.704
2	1.500	1.375	2.94	0.891
3	1.625	1.500	3.17	0.891

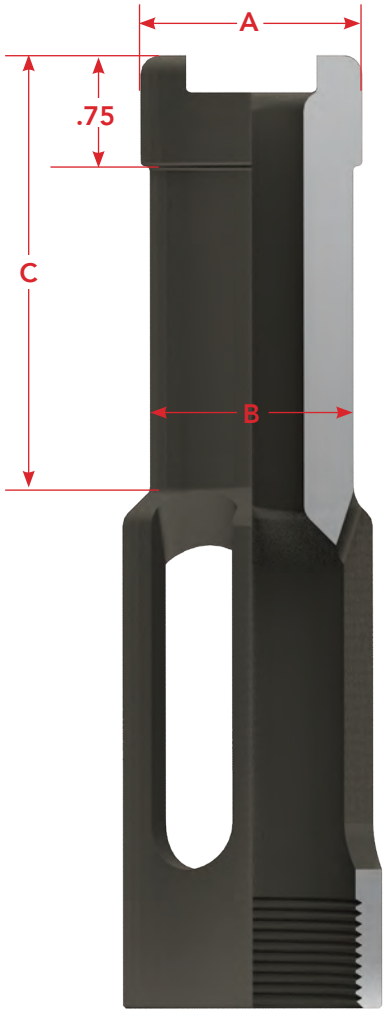

VALVE ROD, BOX END, LONG NECK

Size			Steel	Boronized Steel	Fish Neck Dims			
Tubing	Valve Rod	Thread			A	B	C	I.D.
2-3/8"	7/8"	14 BOX	0658-1076-21	0658-1076-81	1.500	1.375	6.00	0.891
2-7/8"	7/8"	14 BOX	0658-2076-20	0658-2076-80	1.625	1.500	6.00	0.891
2-7/8"	1-1/16"	14 BOX	0658-2076-21	0658-2076-81	1.625	1.500	6.00	1.079

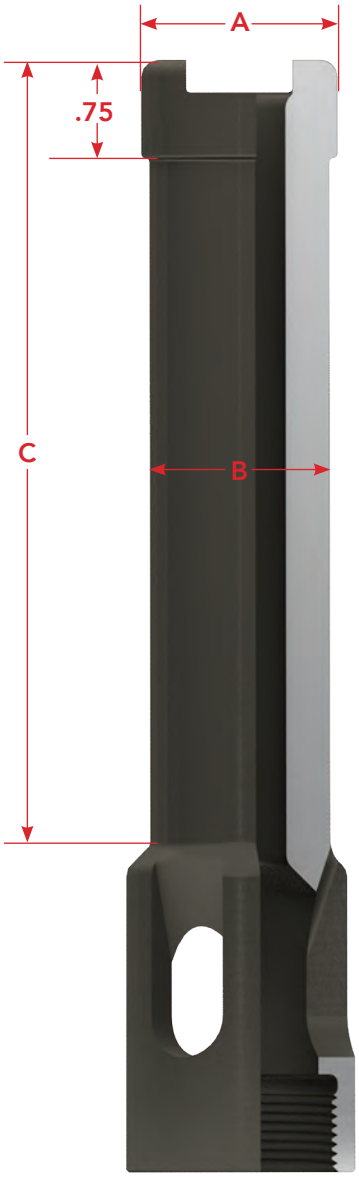

VALVE ROD, BOX END, 8 PORT

#	Tubing	Valve Rod	Thread	17-4 PH Stainless Steel	316 Stainless Steel	316 Stainless Steel Boronized
1	2-3/8"	11/16"	14 BOX	0659-1000-31	—	—
2	2-3/8"	7/8"	14 BOX	0659-1000-30	0659-1000-70	0659-1002-30
3	2-7/8"	7/8"	14 BOX	0659-2000-30	0659-2000-70	0659-2002-30
4	2-7/8"	1-1/16"	14 BOX	0659-2000-32	—	0659-2002-32

	Fish Neck Dims			
#	A	B	C	I.D.
1	1.500	1.375	2.88	0.704
2	1.500	1.375	2.88	0.891
3	1.625	1.500	3.13	0.891
4	1.625	1.500	3.13	1.079

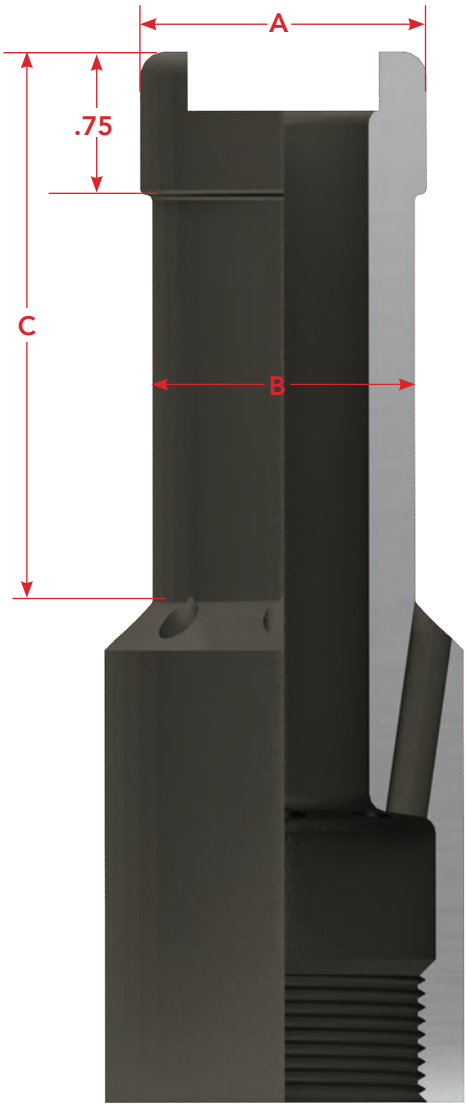

HOLD-DOWNS

Dura Products™
A DISTRIBUTION NOW™ COMPANY

TOP, 3 CUP FOR RW PUMPS

			Part Numbers & Size (Tubing x Pump Bore)			
Item	Description	#REQ'D	2-3/8 x 1-1/4	2-3/8 x 1-1/2	2-7/8 x 2	3-1/2 x 2-1/2
A	Mandrel	1	0658-1001-X0	0658-1001-X0	0658-2001-X0	0658-3001-X0
B	Seating Cup	3				
	1-25/32 + 30 HR		2231-0110-80	2231-0110-80	—	—
	2-1/4 + 70 HR		—	—	2231-0114-10	—
	2-3/4 + 70 HR		—	—	—	2231-0906-10
C	Ring	2	0658-1004-X0	0658-1004-X0	0658-2004-X0[1]	0658-3004-X0
D	Nut	1	0658-1005-X0	0658-1005-X0	0658-2005-X0	0658-3005-X0
E	Bushing	1	0658-1208-X0	0658-1308-X0	0658-2508-X0	0658-3708-X0

1 - 41X0 is 0658-2004-24

MATERIAL OPTIONS	
10XX	1
41X0	2
304 SS	3
NCA 400	5
PTFE/Steel	6
316 SS	7
Boronized	8

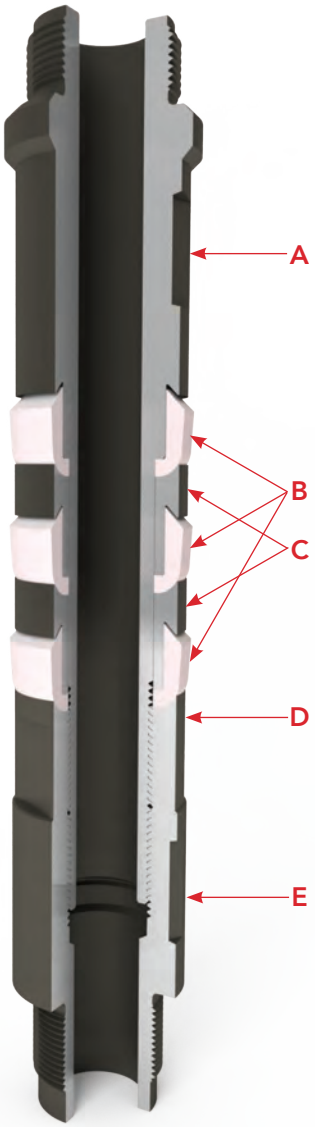

ADAPTING TYPE, TOP 3 CUP, FOR RW PUMPS

These hold-downs include a fitting to run insert pumps in the next larger tubing size.

			Part Numbers & Size (Tubing x Pump Bore)		
Item	Description	#REQ'D	2-7/8" x 1-1/4"	2-7/8" x 1-1/2"	3-1/2" x 2"
A	**Guide**	1	0658-2026-18	0658-2026-20	0658-3026-20
B	**Mandrel**	1	0658-2001-X0	0658-2001-X0	0658-3001-X0
C	Cup, 2-1/4" + 70 HR Seating	3	2231-0114-10	2231-0114-10	—
	Cup, 2-3/4" + 70 HR Seating		—	—	2231-0906-10
D	**Ring, Seating Cup**	2	0658-2004-X0[1]	0658-2004-X0[1]	0658-3004-X0
E	**Nut**	1	0658-2005-X0	0658-2005-X0	0658-3005-X0
F	**Extension Bushing**	1	0658-2208-X0	0658-2308-X0	0658-3508-X0
	Valve Rod Size		11/16"	7/8"	1-1/16"

1 - 41X0 is 0658-2004-24

MATERIAL OPTIONS	
10XX	1
41X0	2
304 SS	3
464 B	4
NCA 400	5
PTFE Coated Steel	6
316 SS	7
41X0 Boronized	8

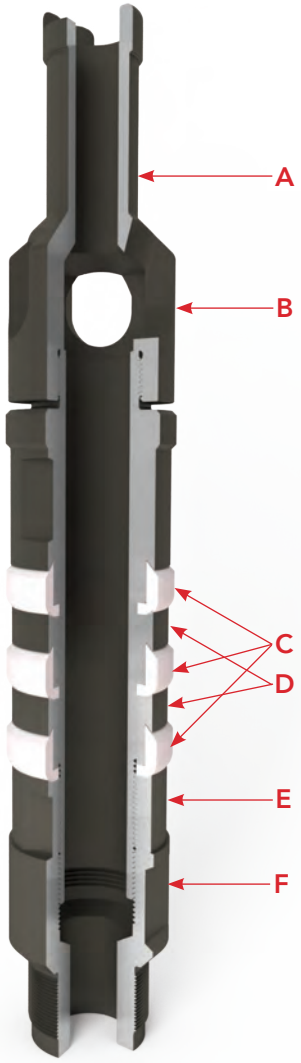

RWAC ADAPTORS

Item	Tubing x Pump Bore	2-7/8" x 1-1/4"		2-7/8 x 1-1/2"		3-1/2" x 2"	
	Valve Rod Size	11/16"	7/8"	11/16"	7/8"	7/8"	1-1/16"
A	Valve Rod Guide	0658-2026-18	0658-2026-20	0658-2026-18	0658-2026-20	0658-2026-20	0658-3026-20
F	Barrel Bushing	0658-2208-10	0658-2208-10	0658-2308-10	0658-2308-11	0658-3508-10	0658-3508-10
G*	Adapter Bushing	—	—	—	—	0658-3221-20	—

See previous page for item F.

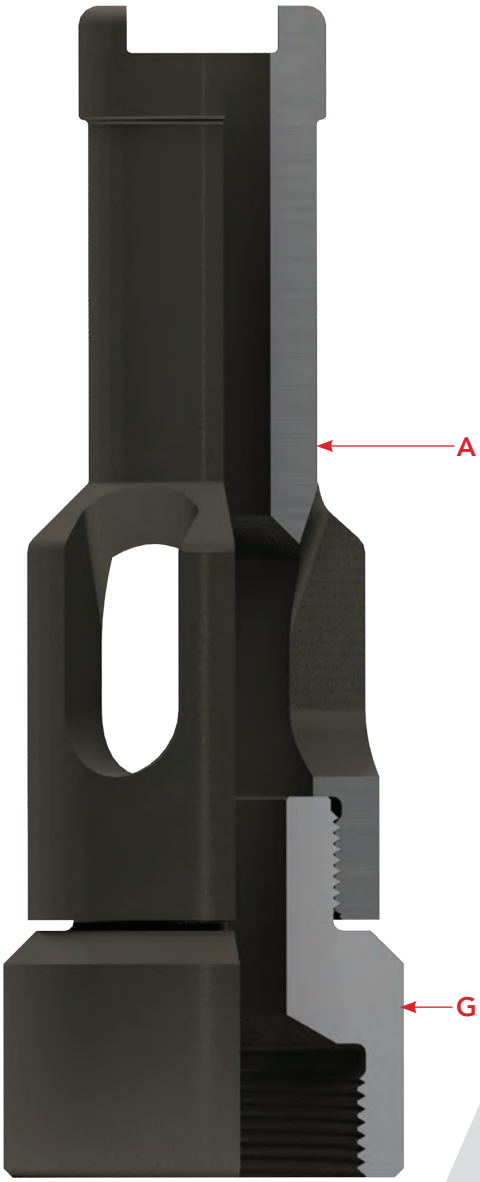

TOP, 3 CUP, FOR RH PUMPS

			Part Numbers & Size (Tubing x Pump Bore)				
Item	Description	#REQ'D	2-3/8 x 1-1/4	2-7/8 x 1-1/4	2-7/8 x 1-1/2	2-7/8 x 1-3/4	3-1/2 x 2-1/4
A	**Mandrel**	1	0658-1001-X0	0658-2001-X0	0658-2001-X0	0658-2001-X0	0658-3001-X0
B	**Seating Cup**	3					
	1-25/32 + 30 HR		2231-0110-80	—	—	—	—
	2-1/4 + 70 HR		—	2231-0114-10	2231-0114-10	2231-0114-10	—
	2-3/4 + 70 HR		—	—	—	—	2231-0906-10
C	**Ring**	2	0658-1004-X0	0658-2004-X0[1]	0658-2004-X0[1]	0658-2004-X0[1]	0658-3004-X0
D	**Nut**	1	0658-1005-X0	0658-2005-X0	0658-2005-X0	0658-2005-X0	0658-3005-X0
E	**Bushing**	1	0658-1308-X0	0658-2308-X0	0658-2307-X0	0658-2307-X0	0658-3708-X0

1 - 41X0 is 0658-2004-24

MATERIAL OPTIONS	
10XX	1
41X0	2
304 SS	3
464 B	4
NCA 400	5
PTFE Coated Steel	6
316 SS	7
41X0 Boronized	8

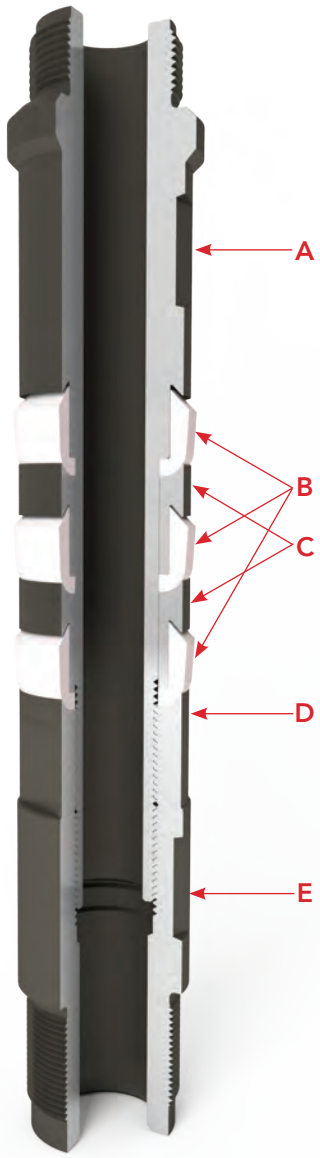

BOTTOM, 3 CUP, FOR RH PUMPS

			Part Numbers & Size (Tubing x Pump Bore)			
Item	**Description**	**#REQ'D**	**2-3/8 x 1-1/4**	**2-7/8 x 1-1/2**	**2-7/8 x 1-3/4**	**3-1/2 x 2-1/4**
A	**Mandrel**	1	0658-1001-X0	0658-2001-X0	0658-2001-X0	0658-3001-X0
B	**Seating Cup**	3				
	1-25/32 + 30 HR		2231-0110-80	—	—	—
	2-1/4 + 70 HR		—	2231-0114-10	2231-0114-10	—
	2-3/4 + 70 HR		—	----	—	2231-0906-10
C	**Ring**	2	0658-1004-X0	0658-2004-X0[1]	0658-2004-X0[1]	0658-3004-X0
D	**Nut**	1	0658-1005-X0	0658-2005-X0	0658-2005-X0	0658-3005-X0
E	**Coupling**	1	0658-1006-X0	0658-2006-X0	0658-2006-X0	0658-3006-X0
API Pipe Thread Connection			1″ LPT	1-1/4″ LPT	1-1/4" LPT	1-1/2" LPT

1 - 41X0 is 0658-2004-24

MATERIAL OPTIONS	
10XX	1
41X0	2
304 SS	3
464 B	4
NCA 400	5
PTFE Coated Steel	6
316 SS	7
41X0 Boronized	8

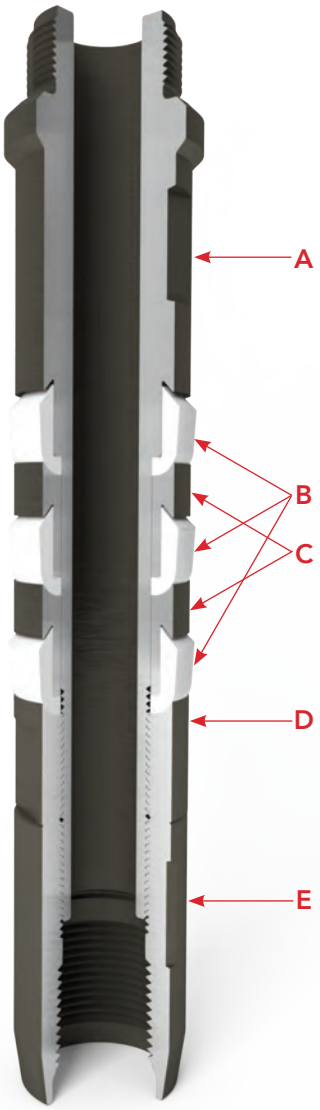

ADAPTING TYPE, TOP 3 CUP, FOR RH PUMPS

These hold-downs include a fitting to run insert pumps in the next larger tubing size.

			Part Numbers & Size (Tubing x Pump Bore)		
Item	Description	#REQ'D	2-7/8 x 1-1/4	3-1/2 x 1-1/2	3-1/2 x 1-3/4
A	**Guide**	1	0658-2026-20	0658-2026-20*	0658-3026-20
B	**Mandrel**	1	0658-2001-X0	0658-3001-X0	0658-3001-X0
C	Cup, 2-1/4" + 70 HR Seating	3	2231-0114-10	—	—
	Cup, 2-3/4" + 70 HR Seating		—	2231-0906-10	2231-0906-10
D	**Ring, Seating Cup**	2	0658-2004-X0[1]	0658-3004-X0	0658-3004-X0
E	**Nut**	1	0658-2005-X0	0658-3005-X0	0658-3005-X0
F	**Extension Bushing**	1	0658-2308-X0	0658-3307-20	0658-3307-20
	Valve Rod Size		7/8"	7/8"	1-1/16"

1 - 41X0 is 0658-2004-24
*-Requires 0658-3221-X0 adaptor bushing

MATERIAL OPTIONS	
10XX	1
41X0	2
304 SS	3
464 B	4
NCA 400	5
PTFE Coated Steel	6
316 SS	7
41X0 Boronized	8

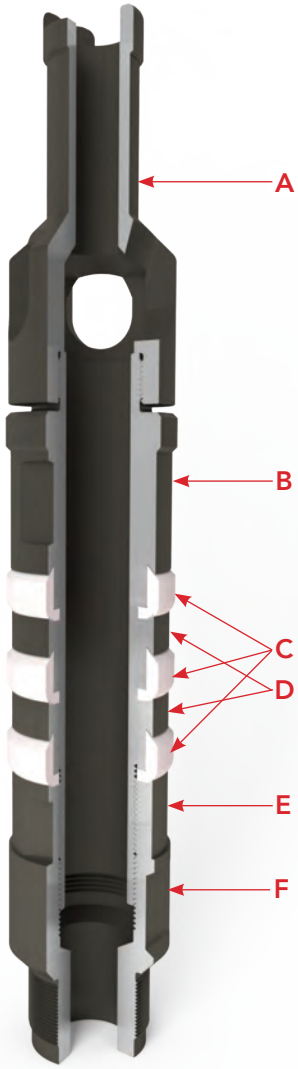

RHAC ADAPTORS

Item	Tubing x Pump Bore	2-7/8" x 1-1/4"		3-1/2" x 1-1/2"		3-1/2" x 1-3/4"
	Valve Rod Size	11/16"	7/8"	11/16"	7/8"	1-1/16"
A	Valve Rod Guide	0658-2026-18	0658-2026-20	0658-2026-18	0658-2026-20	0658-3026-20
F	Barrel Bushing	0658-2308-10	0658-2308-10	0658-3307-20	0658-3307-20	0658-3307-20
G*	Adapter Bushing	—	—	0658-3221-20	0658-3221-20	—

See previous page for item F.

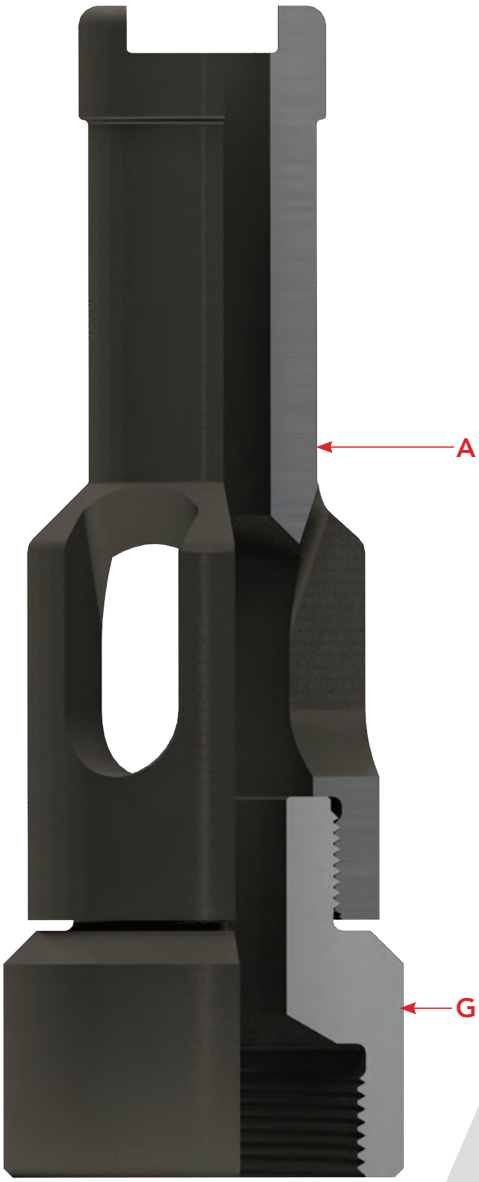

BOTTOM, 3 CUP, FOR RW PUMPS

			Part Numbers & Size (Tubing x Pump Bore)			
Item	Description	#REQ'D	2-3/8 x 1-1/4	2-3/8 x 1-1/2	2-7/8 x 2	3-1/2 x 2-1/2
A	Mandrel	1	0658-1001-X0	0658-1001-X0	0658-2001-X0	0658-3001-X0
B	Seating Cup	3				
	1-25/32 + 30 HR		2231-0110-80	2231-0110-80	—	—
	2-1/4 + 70 HR		—	—	2231-0114-10	—
	2-3/4 + 70 HR		—	—	—	2231-0906-10
C	Ring	2	0658-1004-X0	0658-1004-X0	0658-2004-X0[1]	0658-3004-X0
D	Nut	1	0658-1005-X0	0658-1005-X0	0658-2005-X0	0658-3005-X0
E	Bushing	1	0658-1006-X0	0658-1006-X0	0658-2006-X0	0658-3006-X0
API Pipe Thread Connection			1" LPT	1" LPT	1-1/4" LPT	1-1/2" LPT

1 - 41X0 is 0658-2004-24

MATERIAL OPTIONS	
10XX	1
41X0	2
304 SS	3
464 B	4
NCA 400	5
PTFE Coated Steel	6
316 SS	7
41X0 Boronized	8

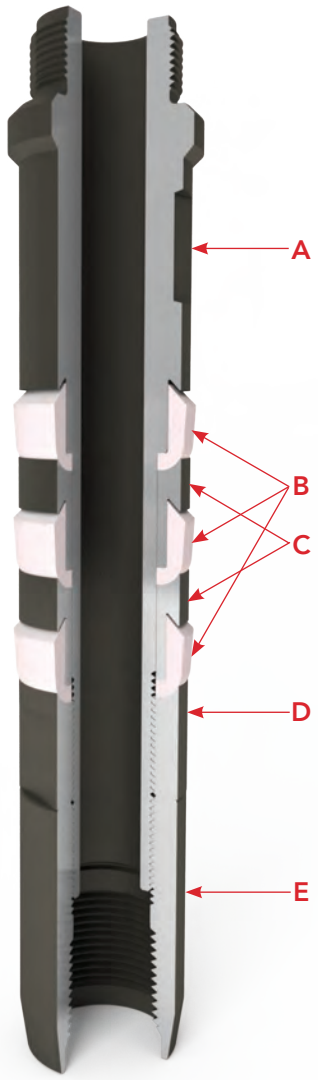

SLIMHOLE, TOP, 1-1/4" RH

Item	Description	# REQ'D	2.063 Tubing
A	Valve Rod Guide	1	0658-8001-10
B	Cup, Type "O" 1-1/2" +70 (1.250 ID)	3	2231-1321-70
C	Seating Cup Ring	2	0658-8004-10
D	Cup Nut	1	0658-8005-10
E	Bushing	1	0658-2312-10
Pump Seating Nipple			0636-2170-15
Pump Seating Nipple ID			1.540"

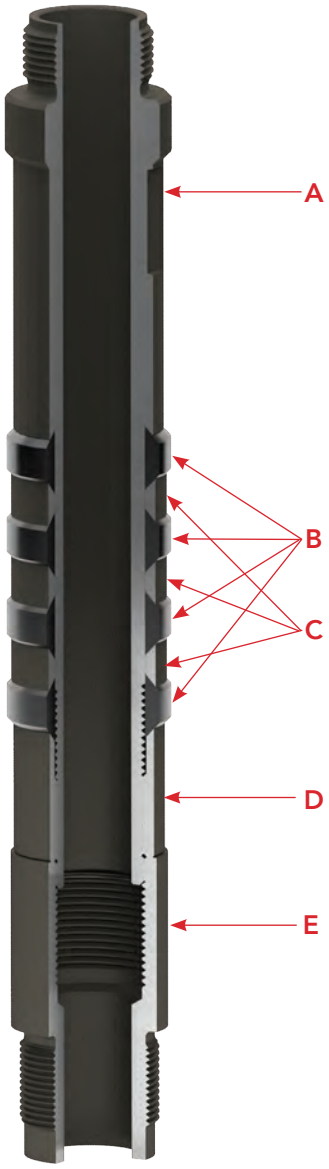

SLIMHOLE, BOTTOM

Item	Description	# REQ'D	1.900 Tubing	2.063 Tubing
A	Seating Cup Mandrel	1	0658-7001-11	0658-8001-10
B	Cup, Type "O"			
	1-1/2" -10 (1.125 ID)	3	2231-1057-00	—
	1-1/2" +70 (1.250 ID)		—	2231-1321-70
C	Seating Cup Ring	2	0658-7004-10	0658-8004-10
D	Cup Nut	1	0658-7005-10	0658-8005-10
E	Tapered Coupling	1	0658-7006-10	0658-8006-10
API Line Pipe Connection			3/4" LP	3/4" LP
Pump Seating Nipple			0636-1270-13	0636-2170-15
Pump Seating Nipple ID			1.460"	1.540"

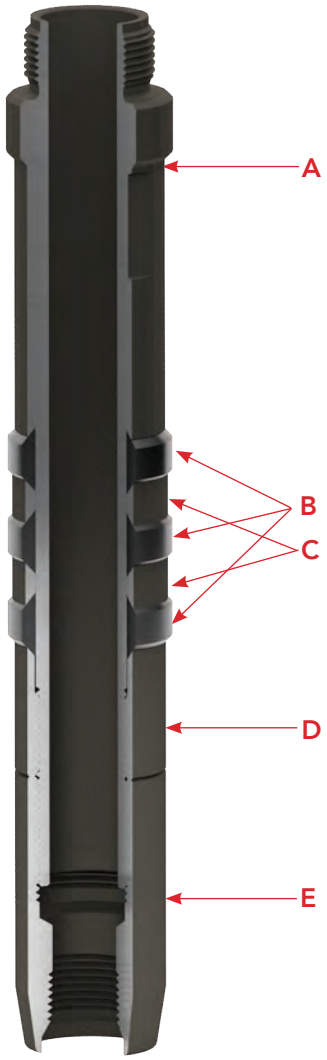

MECHANICAL, BOTTOM LOCK

Item	Description	2-3/8"	2-7/8"	3-1/2"	4-1/2"
A	Top Bushing	0658-1013-X0	0658-2013-X0	0658-3013-X0	0658-4013-X0
B	Seat	0658-1014-X0	0658-2014-X0	0658-3014-X0	0658-4014-X0
C	Mandrel[1]	0658-1015-20	0658-2015-21	0658-3015-20	0658-4015-20
API Assembly of A-C		S22-20	S22-25	S22-30	S22-40
Seating Nipple[2]		0636-0110-X5	0636-2051-X5	0636-0130-X5	0636-0140-X5

MATERIAL CODES	
Steel	2
Stainless Steel	3
Brass	4
NCA 400	5

1 - For more material options see Mandrels in section M.
2 - For more material options see Pump Seating Nipples in section N.

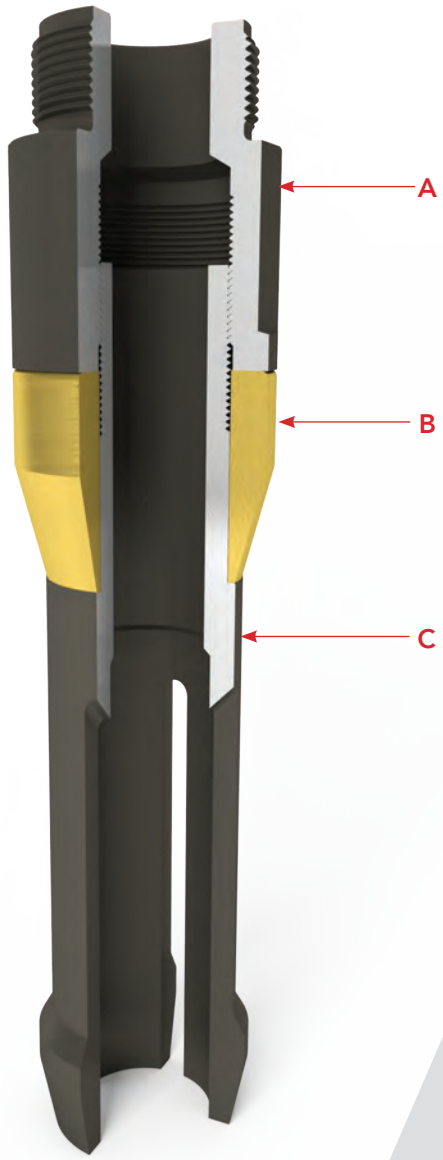

MECHANICAL AND FRICTION, BOTTOM LOCK

Item	Description	2-7/8"
A	Top Bushing	0658-2083-2X
B	NCA 400 Ring	0658-2589-54
C	O-Ring	0699-2224-00
D	Seat	0658-2084-40
E	Mandrel[1]	0658-2015-21
Seating Nipple[2]		0636-2051-15

MATERIAL CODES	
Steel	0
Stainless Steel	3
NCA 400	5

1 - For more material options see Mandrels in section M.
2 - For more material options see Pump Seating Nipples in section N.

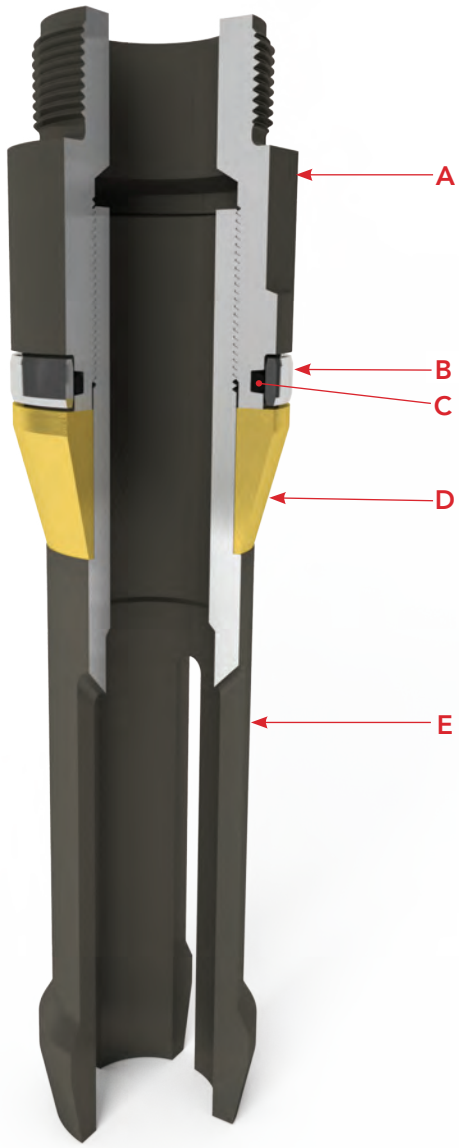

ASSEMBLY TOOL

This device allows the API Mechanical Bottom Lock assemblies to be tightened using a standard 7/8" socket and a torque wrench. Proper support on a pump stand during assembly ensures that the lock fingers are not damaged or deformed.

The use of a torque wrench helps to prevent over tightening of the assembly.

Size	Part Number
2-3/8"	T658-1015-00
2-7/8"	T658-2015-00

VACUUM TESTING TOOL

This device allows for pumps utilizing an API Mechanical Bottom Lock Hold-Down to be tested using a vacuum gauge. Pipe fittings and vacuum gauge are not included. Please contact Dura Products for more information.

Size	Part Number
2-3/8"	T658-1016-00
2-7/8"	T658-2016-00

MECHANICAL, SIMPLEX BOTTOM LOCK

Item	Part	2-3/8"	2-7/8"	3-1/2"
A	Bushing	0658-1021-X0	0658-2021-X0	0658-3021-X0
B	Ring	0658-1022-30	0658-2022-30	0658-3022-30
C	Mandrel	0658-1023-X0	0658-2023-X0	0658-3023-X0
D	Lock	0658-1024-21	0658-2024-21	0658-3024-21
E	Coupling	0658-1025-X1	0658-2025-X0	0658-3025-X0
Outside Diameter of Ring		1.875"	2.344"	2.844"
API LP Thread Connection		1"	1-1/4"	1-1/2"

MATERIAL CODES	
Steel	2
Stainless Steel	3
Brass	4
NCA 400	5

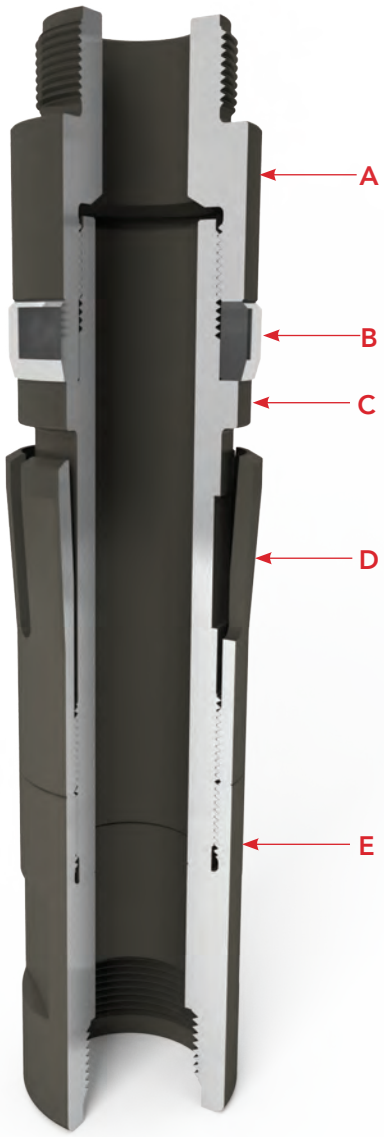

MECHANICAL, SIMPLEX, RW, TOP

Tubing Size		2-3/8"	2-3/8"	2-7/8"	3-1/2"
Pump Bore		1-1/16" 1-1/4"	1-1/2"	2"	2-1/2"
Valve Rod Size		11/16"	11/16"	7/8"	1-1/16"
Item	Description	Part Numbers			
A	Valve Rod Guide	0658-1026-X0	0658-1026-X0	0658-2026-X0	0658-3026-X0
B	Stainless Ring	0658-1022-30	0658-1022-30	0658-2022-30	0658-3022-30
C	Mandrel[1]	0658-1023-X0	0658-1023-X0	0658-2023-X0	0658-3023-X0
D	Lock	0658-1024-21	0658-1024-21	0658-2024-21	0658-3024-21
E	Bushing	0658-1228-X0	0658-1227-X0	0658-2427-X0	0658-3627-X0
Outside Diameter of Rings		1.875	1.875	2.344	2.844
API Assembly		S21-20-125	S21-20	S21-25	S21-30

MATERIAL CODES	
10XX	1
41X0	2
304 SS	3
NCA 400	5
41X0 PTFE Coated	6
316 SS	7
41X0 Boronized	8
Electroless Nickel Coated[1]	8

1 - ENC material option is for mandrel only.

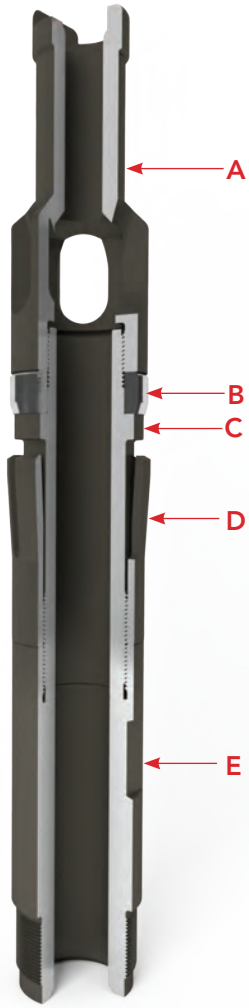

MECHANICAL, SIMPLEX, RH, TOP

Tubing Size		2-3/8"	2-7/8"	2-7/8"	3-1/2"
Pump Bore		1-1/16" 1-1/4"	1-1/2"	1-3/4"	2-1/4"
Valve Rod Size		11/16"	7/8"	7/8"	1-1/16"
Item	Description	Part Numbers			
A	Valve Rod Guide	0658-1026-X0	0658-2026-X0	0658-2026-X0	0658-3026-X0
B	Stainless Ring	0658-1022-30	0658-2022-30	0658-2022-30	0658-3022-31
C	Mandrel[1]	0658-1023-X0	0658-2023-X0	0658-2023-X0	0658-3023-X0
D	Lock	0658-1024-21	0658-2024-21	0658-2024-21	0658-3024-21
E	Bushing	0658-1227-X0	0658-2427-X0	0658-2427-X0	0658-3627-X0
Outside Diameter of Rings		1.875	2.344	2.344	2.844
API Assembly		S21-20	S21-25	S21-25	S21-30

MATERIAL CODES	
10XX	1
41X0	2
304 SS	3
NCA 400	5
41X0 PTFE Coated	6
316 SS	7
41X0 Boronized	8
Electroless Nickel Coated[1]	8

1 - ENC material option is for mandrel only.

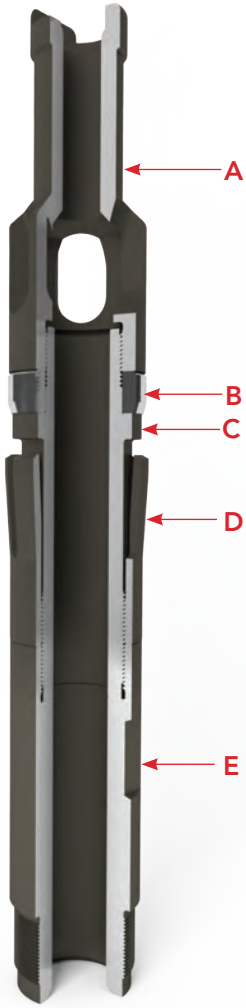

FRICTION SEAL, BOTTOM

The "Friction Seal Hold-Down" is an all-metal hold-down that can be used in high temperature applications, specifically in areas where the fabric seating cups will not operate.

- Metal to metal seal that provides a positive seal with no leakage path
- Materials are suitable for high temperature application
- The holding force may be varied by either the addition, or subtraction, of friction sealing rings
- May be used in wells where heavy shock loading is anticipated
- Manufactured to accommodate repeated seating/unseating cycles

Item	Description	# Required			2-3/8"	2-7/8"	3-1/2"	4-1/2"
A	Mandrel	1			0658-1094-X0	0658-2094-X0	0658-3094-X0	0658-4094-X0
B	Friction Ring	1	2	3	0658-1083-30	0658-2083-30	0658-3069-30	0658-4083-30
C	Spacer	2	1	0	0658-1055-X0	0658-2055-X0	0658-3055-X0	0658-4055-X0
D	Nut	1			0658-1093-X0	0658-2093-X0	0658-3093-X0	0658-4093-X0
E	Tapered Coupling	1			0658-1006-X0	0658-2044-X0	0658-3044-X0	0658-4006-X1
Mandrel NO-GO					1.865"	2.339"	2.856"	3.843"
Line Pipe Thread					1" LPT	1-1/4" LPT	1-1/2" LPT	2" LPT

MATERIAL CODES	
10XX Steel	1
41X0 Steel	2
Stainless Steel	3
Brass	4
NCA 400	5

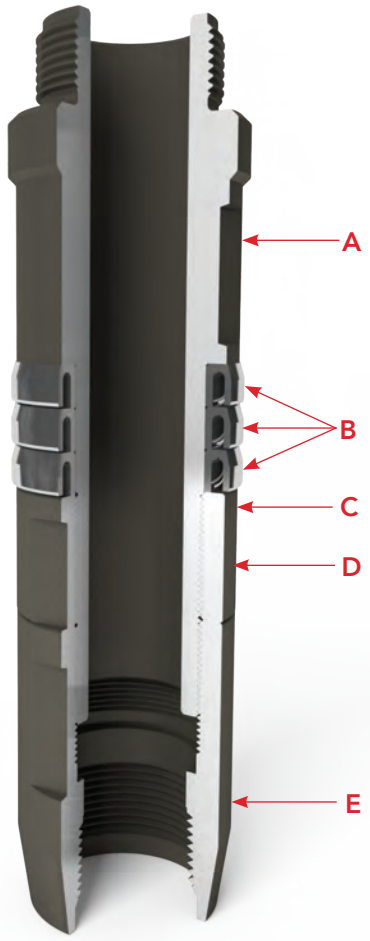

FRICTION SEAL, TOP

Item	Description	# Required			2-3/8" x 1-1/4" RW	2-7/8" x 2" RW	3-1/2" x 2-1/2 RW	4-1/2" x 3-1/4" RX
A	Mandrel	1			0658-1094-X0	0658-2094-X0	0658-3094-X0	0658-4094-X0
B	Friction Ring	1	2	3	0658-1083-30	0658-2083-30	0658-3069-30	0658-4083-30
C	Spacer	2	1	0	0658-1055-X0	0658-2055-X0	0658-3055-X0	0658-4055-X0
D	Nut	1			0658-1093-X0	0658-2093-X0	0658-3093-X0	0658-4093-X0
E	Bushing	1			0658-1208-X0*	0658-2067-X0	0658-3067-X0	0658-4067-X0
Mandrel NO-GO					1.865"	2.339"	2.856"	3.843"

*2-3/8" X 1-1/2" RW use 0658-1308-X0

MATERIAL CODES	
10XX Steel	1
41X0 Steel	2
Stainless Steel	3
Brass	4
NCA 400	5

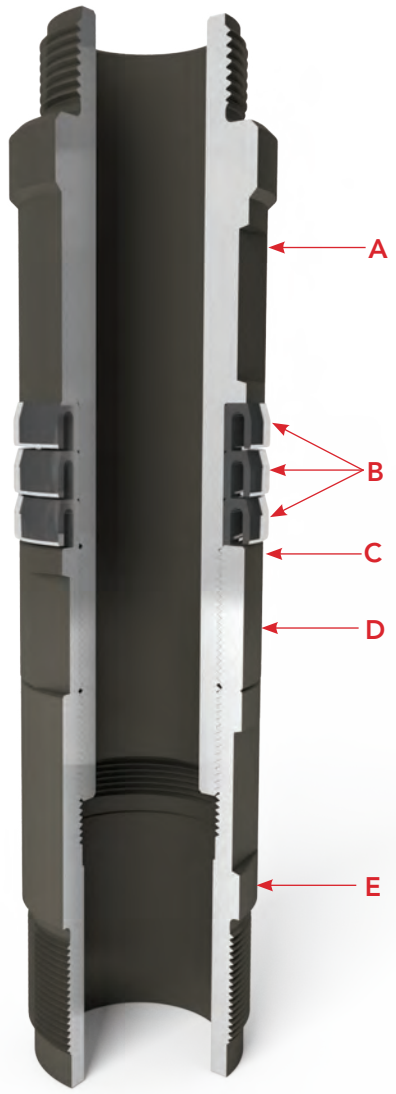

FRICTION SEAL, BYPASS TUBE COMPONENTS

The "Friction Seal Hold-Down" assembly with bypass tube has been designed for cyclic (huff and puff) steam injection applications. To steam the reservoir, the pump is unseated and the pump assembly is lifted so that the smaller OD bypass tube is in the nipple area, providing a larger area for steam injections. Upon completion of the steam injection cycle, the pump is reseated and the production cycle restarted. The same application can be used for killing of the well or injecting into formation. The "Friction Seal Hold-Down" may also be used in other applications, specifically in high volume wells and in wells where heavy shock loading is anticipated. The operation of the double displacement/duplex pump, which is hydraulically unbalanced, can benefit from use of the friction seal ring since its holding power can be adjusted to fit the application.

The "Friction Seal Hold-Down" is available in either a top or bottom hold-down design. The Friction Seal uses the same seating cup coupling as a 3-cup hold-down of equivalent size.

Item A connects to hold-down mandrel (see previous page), and Item C connects to RH extension or RW barrel.

Item	Description	2-7/8"	3-1/2"
A	**Mandrel Bushing**	0658-2092-X0	0658-3092-X0
B	**Bypass Tube**	1.50 RH Barrel	2.00 RW Barrel
C	**Barrel Connector**	0658-2081-X0	0658-3081-X0
–	**RH Ext/Barrel**	1.75 EXT/2.00 RW	2.25 EXT/2.50 RW

MATERIAL CODES	
10XX Steel	1
41X0 Steel	2
Stainless Steel	3
Brass	4
NCA 400	5

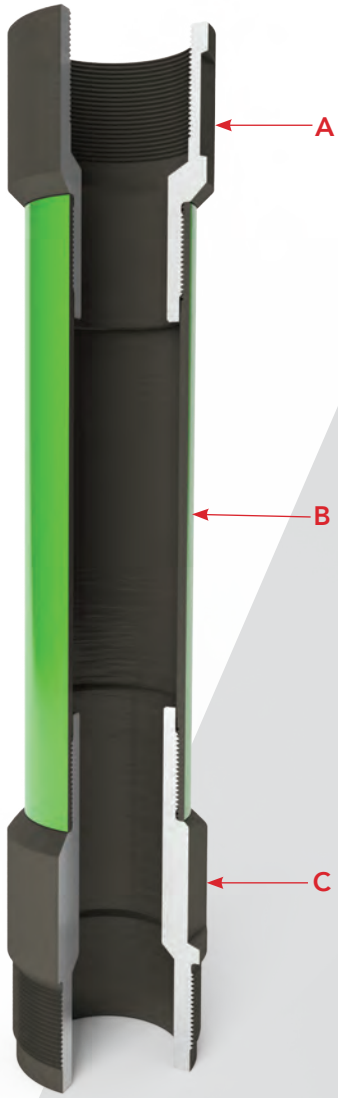

TYPE O, PULL TUBE PUMP, TOP

These hold-downs work in the standard API 3 Cup pump seating nipple (PSN).

Tubing			2-3/8"	2-3/8"	2-3/8"	2-7/8"
Pump Type			1-1/4" RW	1-1/4" RH	1-1/2" RW	1-3/4" RH & 2" RW
Pull Tube Size			15/16"	15/16"	1-1/8"	1-1/2"
A	Pull Tube Guide	1	0699-8705-10	0699-8705-10	0699-8706-10	0658-2090-21
B	Mandrel	1	0699-8707-10	0699-8707-10	0699-8707-10	0699-8615-20
C	Cups-Type "O"	3				
	1-3/4" +70, 1.440 I.D.		2231-2105-80	2231-2105-80	2231-2105-80	—
	2-1/4" +70, 1.973 I.D.		—	—	—	2231-8003-45
D	Spacer	2	0699-8608-20	0699-8608-20	0699-8608-20	0699-8616-10
E	End Spacer	1	0699-8607-20	0699-8607-20	0699-8607-20	—
F	Lock Nut	1	0699-8605-20	0699-8605-20	0699-8605-20	0699-8617-10
G	Bushing	1	0699-8648-10	0699-8648-21	0699-8648-20	0699-8628-20
Mandrel I.D.			1.16"	1.16"	1.16"	1.63"
Bushing I.D.			1.00"	1.00"	1.19"	1.63"

1- Multiple material options available for hold down parts, see the appropriate catalogue section.

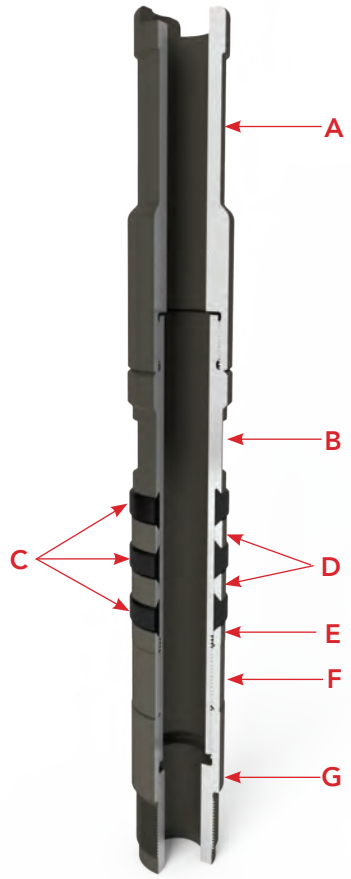

BRASS WEDGE RING, BOTTOM

These hold-downs work in the standard API 3 Cup pump seating nipple (PSN).

Item	Description	Quantity	Material	Part Number
A	Mandrel	1	41X0	0699-8525-20
B	Spacer	6	10XX	0699-8637-10
C	Wedge Ring	1-6	Brass	0699-8636-40
D	End Spacer	1	10XX	0658-2004-11
E	Spacer	2	10XX	0658-2004-10
F	Lock Nut	1	10XX	0658-2005-10
G	Tapered Coupling	1	10XX	0658-2006-10
H	2-1/4" + 70 Seating Cups	3	Composite	2231-0114-10
			Nylon	2231-1618-70

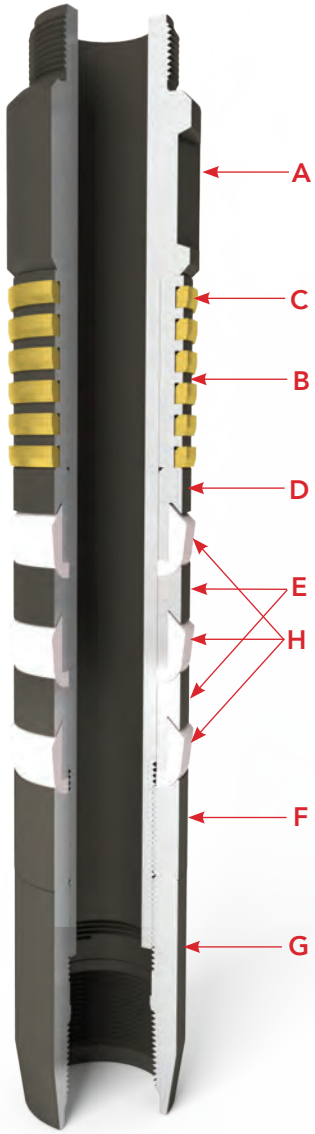

BOTTOM, 5 CUP

These hold-downs work in the standard API 3 Cup pump seating nipple (PSN).

Item	Description	Quantity	Material	Part Number
A	Mandrel	1	41X0	0699-8525-20
B	End Spacer	1	10XX	0658-2004-11
C	2-1/4" + 70 Seating Cups	5	Composite	2231-0114-10
			Nylon	2231-1618-70
D	Spacer	4	10XX	0658-2004-10
E	Lock Nut	1	10XX	0658-2005-10
F	Tapered Coupling	1	10XX	0658-2006-10

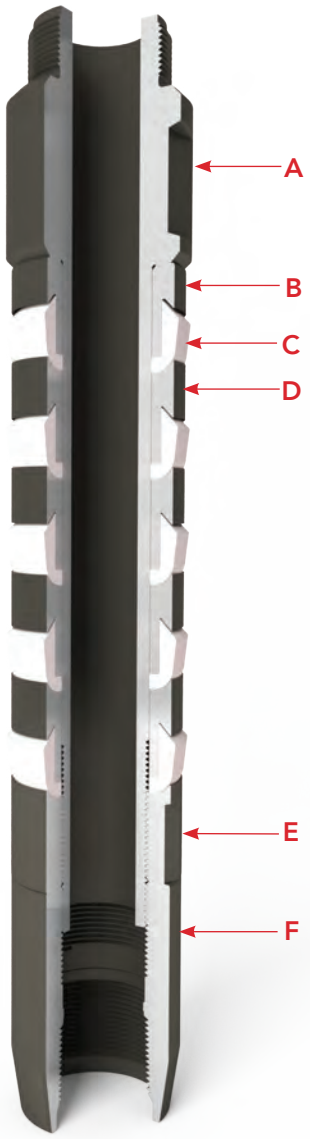

BOTTOM, 3 CUP, TAPERED BRASS SLEEVE

These hold-downs work in the standard API 3 Cup pump seating nipple (PSN).

Item	Description	Quantity	Material	2-3/8 Tubing	2-7/8 Tubing
A	Mandrel	1	41X0	0659-1076-20	0699-8525-10
B	Sleeve	1	Brass	0659-1077-40	0699-8525-40
C	Spacer	3	10XX	0658-1004-10	0658-2004-10
D	Seating Cup	3			
	1-25/32" + 30 HR		Composite	2231-0110-80	
	1-25/32" + 30 HR		Nylon	2231-1462-30	
	2-1/4" + 70 HR		Composite		2231-0114-10
	2-1/4" + 70 HR		Nylon		2231-1618-70
E	Lock Nut	1	10XX	0658-1005-10	0658-2005-10
F	Tapered Coupling	1	10XX	0658-1006-10	0658-2006-10

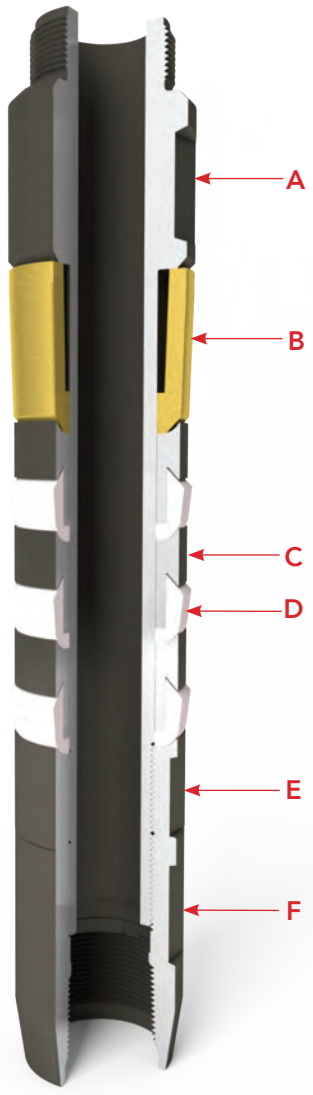

DUPLEX, BRASS WEDGE RING, 3 CUP, BOTTOM

These hold-downs work in the standard API 3 Cup pump seating nipple (PSN).

Item	Description	# Req'd	2-3/8" x 1-1/2"	2-7/8" x 2"
A	Mandrel	1	0658-1058-X0	0658-2058-X0
B	Spacer	3	0658-1055-X0	0658-2055-X0
C	Brass Wedge Ring	3	0658-1049-41	0658-2049-41
D	Adapter Ring	1	0658-1038-X2	0658-2038-X2
E	Cup			
	1-25/32 + 30, 1.250 I.D	3	2231-1685-40	—
	2-1/4" +70, 1.750 I.D		—	2231-1685-20
F	Cup Ring	2	0658-1738-X0	0658-2238-X0
G	Cup Nut	1	0658-1043-X0	0658-2043-X0
H	Tapered Coupling	1	0658-1044-X0	0658-2044-X0
—	Assembly of A–H	—	0658-1057-01	0658-2057-01

MATERIAL CODES	
10XX Steel	1
41X0 Steel	2
304 SS	3
NCA 400	5

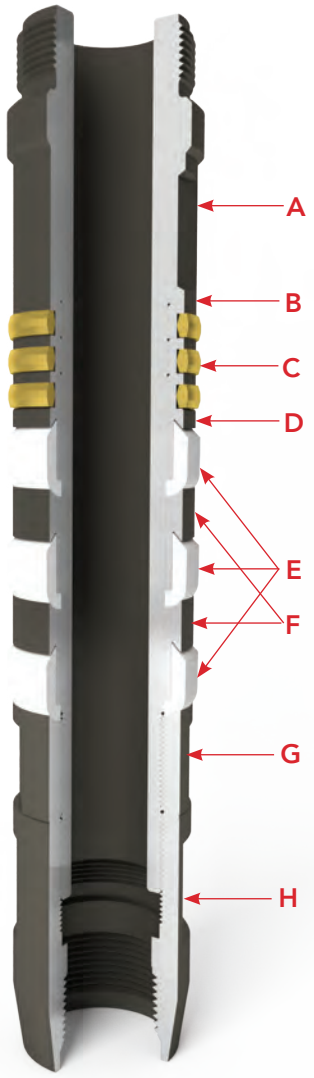

Dura Products
A DISTRIBUTIONNOW COMPANY

TUBING PUMP, 2 CUP, API

2-3/8 x 1-3/4			
Item	Description	# Req'd	Part Numbers
A	Mandrel	1	0658-1756-X0
B	Cup, 1-3/4" - 10, Composite	2	2231-0168-30
C	Seating Cup Ring	1	0658-1004-X0
D	Lock Nut	1	0658-1005-X0
E	Tapered Coupling[1]	1	0658-1006-X0
API LP Thread Connection			1″

MATERIAL CODES	
10XX Steel	1
41X0 Steel	2
304 SS	3
NCA 400	5

2-7/8 x 2-1/4			
Item	Description	# Req'd	Part Numbers
A	Mandrel	1	0658-2256-X0
B	Cup, 2-1/4" - 10, Composite	2	2231-0168-60
C	Seating Cup Ring	1	0658-2004-X0
D	Lock Nut	1	0658-2005-X0
E	Tapered Coupling[1]	1	0658-2006-X0
API LP Thread Connection			1-1/4″

3-1/2 x 2-3/4			
Item	Description	# Req'd	Part Numbers
A	Mandrel	1	0658-2756-X0
B	Cup, 2-3/4" - 10, Composite	2	2231-0785-90
C	Seating Cup Ring	1	0658-3004-X0
D	Lock Nut	1	0658-3005-X0
E	Tapered Coupling[1]	1	0658-3006-X0
API LP Thread Connection			1-1/2"

1 - Tapered coupling provides hold-down no-go.

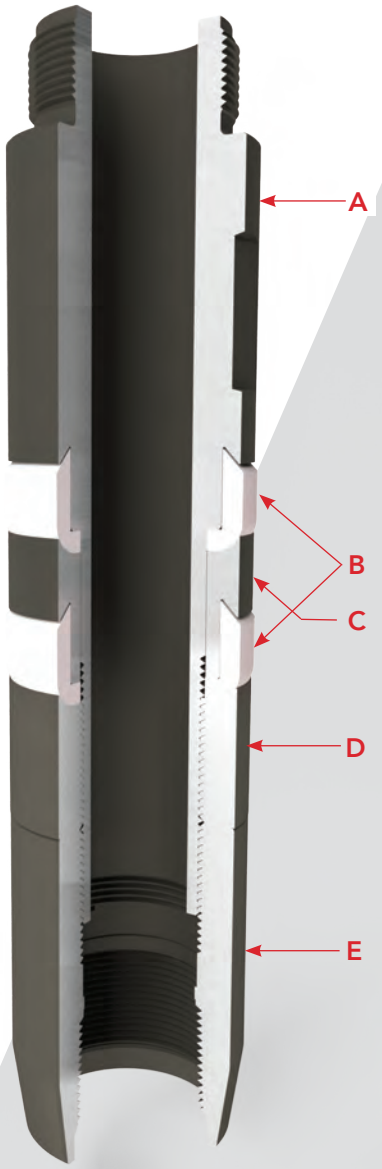

WEDGE RING, BOTTOM

These hold-downs work in the standard API 3 Cup pump seating nipple (PSN).

Item	Description	Quantity	Tubing Size	
			2-7/8"	3-1/2"
A	Mandrel	1	0699-8716-X0	0699-8735-X0
B	Spacer	5	0699-8637-X0	0699-8729-X0
C	Wedge Ring (Brass)	5	0699-8636-40	0699-8730-40
D	Nut	1	0699-8816-X0	0699-8736-X0
E	Coupling	1	0658-2006-X0	0658-3006-X0
–	PSN	1	0636-1220-12	0636-1230-12

MATERIAL CODES	
10XX Steel	1
41X0 Steel	2
304 SS	3
NCA 400	5

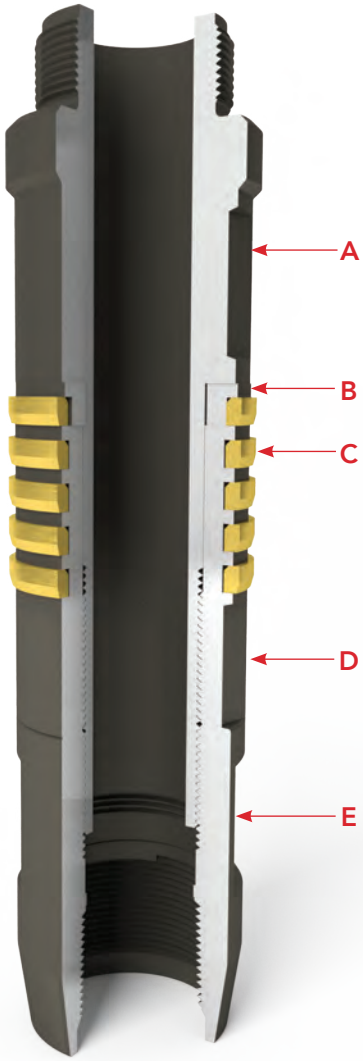

WEDGE RING, TOP, RW PUMP

These hold-downs work in the standard API 3 Cup pump seating nipple (PSN).

Item	Description	Quantity	Tubing & Pump Bore Size	
			2-7/8" x 2.00"	3-1/2" x 2.50"
A	Mandrel	1	0699-8716-X0	0699-8735-X0
B	Spacer	5	0699-8637-X0	0699-8729-X0
C	Wedge Ring (Brass)	5	0699-8636-40	0699-8730-40
D	Nut	1	0699-8816-X0	0699-8736-X0
E	Bushing	1	0658-2508-X0	0658-3708-X0
–	PSN	1	0636-1220-12	0636-1230-12

MATERIAL CODES	
10XX Steel	1
41X0 Steel	2
304 SS	3
NCA 400	5

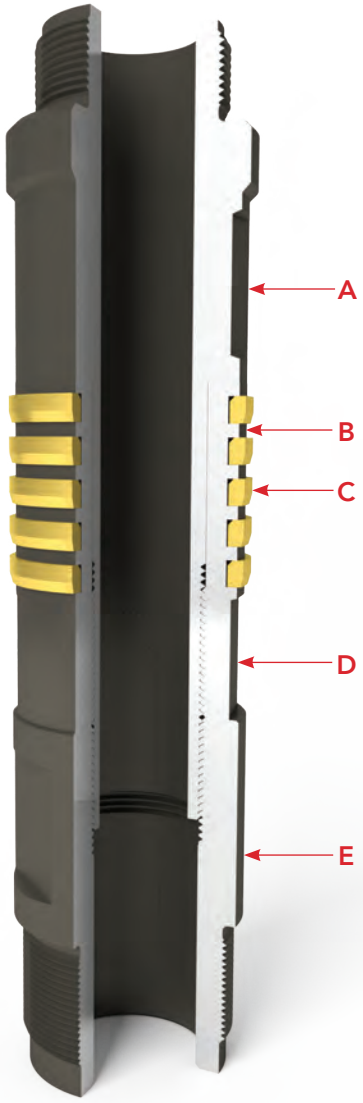

WEDGE RING, TOP, RH PUMP

These hold-downs work in the standard API 3 Cup pump seating nipple (PSN).

Item	Description	Quantity	Tubing & Pump Bore Size		
			2-7/8" x 1.50"	2-7/8" x 1.75"	3-1/2" x 2.25"
A	Mandrel	1	0699-8716-X0	0699-8716-X0	0699-8735-X0
B	Spacer	5	0699-8637-X0	0699-8637-X0	0699-8729-X0
C	Wedge Ring (Brass)	5	0699-8636-40	0699-8636-40	0699-8730-40
D	Nut	1	0699-8816-X0	0699-8816-X0	0699-8736-X0
E	Bushing	1	0658-2307-X0	0658-2508-X0	0658-3708-X0
F	Extension	1	0628-0115-XX	0628-0117-XX	0628-0122-XX

MATERIAL CODES	
10XX Steel	1
41X0 Steel	2
304 SS	3
NCA 400	5

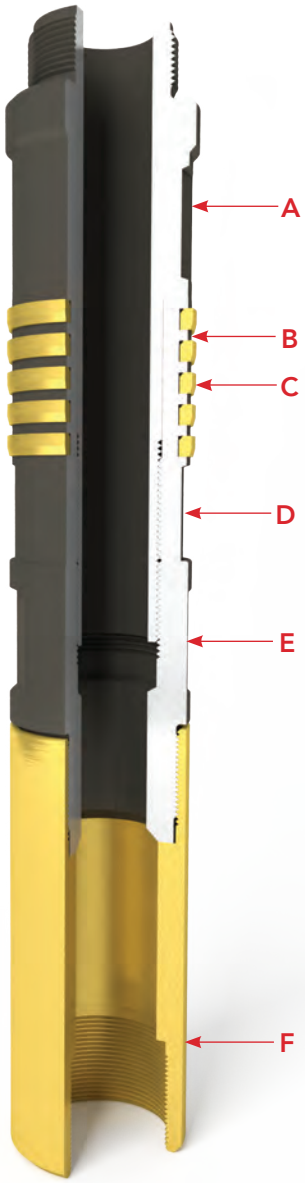

TYPE O, SINGLE WEDGE RING, PULL TUBE PUMP, TOP

Tubing			2-3/8"	2-3/8"	2-3/8"
Pump Type			1-1/4" RW	1-1/4" RH	1-1/2" RW
Pull Tube Size			15/16"	15/16"	1-1/8"
A	Pull Tube Guide	1	0699-8705-10	0699-8705-10	0699-8706-10
B	Mandrel	1	0699-8767-X0	0699-8767-X0	0699-8767-X0
C	Brass Wedge Ring	1	0658-1049-41	0658-1049-41	0658-1049-41
D	Cups-Type "O"				
	1-3/4" +70, 1.440 I.D.	3	2231-2105-80	2231-2105-80	2231-2105-80
E	Spacer	2	0699-8608-X0	0699-8608-X0	0699-8608-X0
F	End Spacer	2	0699-8607-X0	0699-8607-X0	0699-8607-X0
G	Lock Nut	1	0699-8605-X0	0699-8605-X0	0699-8605-X0
H	Bushing	1	0699-8648-10	0699-8648-X1	0699-8648-20
Mandrel I.D.			1.16"	1.16"	1.16"
Bushing I.D.			1.00"	1.00"	1.19"
Pump Seating Nipple			0636-1210-12	0636-1210-12	0636-1210-12

MATERIAL CODES	
10XX Steel	1
41X0 Steel	2
304 SS	3
NCA 400	5

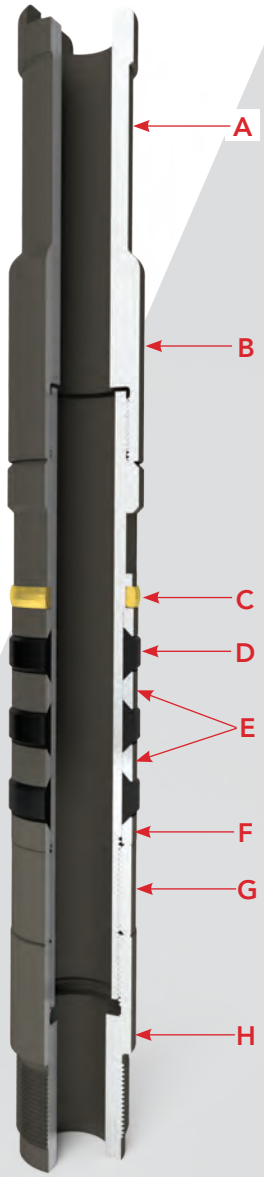

LIFT SUBS

Dura Products™
A DISTRIBUTION NOW® COMPANY

SIZES

API SR Pin Size	Length (L)	Steel
3/4" x 3/4"	12.00"	0699-8715-10
7/8" x 7/8"	12.00"	0699-8715-11
1" x 1"	11.38"	0699-8715-12
1" x 7/8"	11.63"	0699-8715-14
7/8" x 7/8"	23.00"	0699-8715-15
3/4" x 7/8"	12.00"	0699-8715-16

Length is from pin shoulder to pin shoulder.

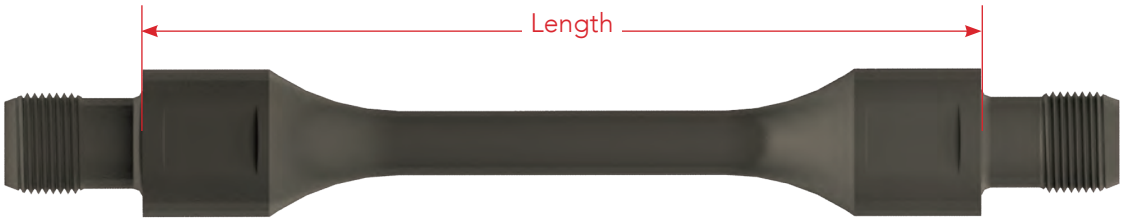

LOCKS

Dura Products™
A DISTRIBUTION NOW® COMPANY

LOCK, SIMPLEX

Tubing	I.D. Of Seat	O.D. Of Lock	Heat Treated Steel
2-3/8"	1.781"	1.975"	0658-1024-21
2-7/8"	2.281"	2.435"	0658-2024-21
3-1/2"	2.781"	2.935"	0658-3024-21

Note: these are not interchangeable in other manufacturer's assemblies.

LOCK, API BOTTOM MECHANICAL

Tubing	Heat Treated Steel	Stainless Steel
2-3/8"	0658-1015-20	0658-1015-30
2-7/8"	0658-2015-21	0658-2015-30
3-1/2"	0658-3015-20	0658-3015-30
4-1/2"	0658-4015-20	—

Note: these are not interchangeable in other manufacturer's assemblies.

MANDRELS

Dura Products™
A DISTRIBUTION NOW™ COMPANY

3 CUP, TYPE HR, API

Tubing	API	No-Go	ID	Cup OD	Cup ID	Part Numbers
2-3/8"	S11-20	1.895"	0.875"	1-25/32" +30	1.187"	0658-1001-X0
2-7/8"	S11-25	2.339"	1.250"	2-1/4" +70	1.562"	0658-2001-X0
3-1/2"	S11-30	2.839"	1.625"	2-3/4" +70	2.000"	0658-3001-X0

MATERIAL CODES	
10XX	1
41X0	2
304 SS	3
NCA 400	5
PTFE Coated Steel	6
316 SS	7
Boronized Steel	8

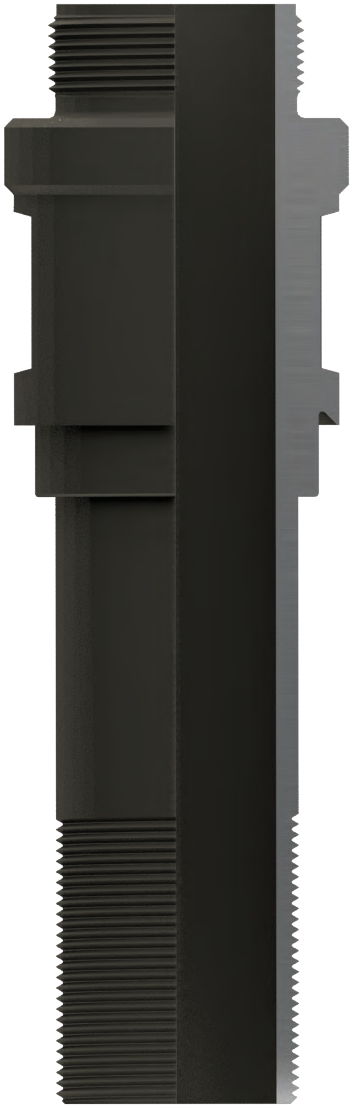

3 CUP, TYPE O, SLIMHOLE

Made for type 'O' cups to provide maximum fluid flow through the mandrel. Both ends are externally threaded, the upper end goes to the lower barrel cage, while the lower end fits the lock nut and coupling.

Tubing	No-Go (A)	ID	Cup OD	Cup ID (B)	Part Numbers	PSN
1.900"	1.516"	0.88"	1-1/2" -10	1.125"	0658-7001-X1	0636-1270-13
2.063"	1.594"	0.94"	1-1/2" +70	1.250"	0658-8001-X0	0636-2170-15

MATERIAL CODES	
10XX	1
41X0	2
304 SS	3
NCA 400	5
316 SS	7

Made for type 'O' cups to provide maximum fluid flow through the mandrel. Both ends are externally threaded, the upper end goes to the lower barrel cage, while the lower end fits the lock nut and coupling.

TUBING PUMP, 2 CUP, TYPE HR, API

Tubing	Pump Bore	API Numbers	Mandrel OD	Cup OD	Cup ID	Part Numbers
2-3/8"	1-3/4"	S17-20	1.687"	1-3/4" -10	1.187"	0658-1756-X0
2-7/8"	2-1/4"	S17-25	2.187"	2-1/4" -10	1.562"	0658-2256-X0
3-1/2"	2-3/4"	S17-30	2.687"	2-3/4" -10	2.000"	0658-2756-X0

MATERIAL CODES	
10XX	1
41X0	2
304 SS	3
NCA 400	5
316 SS	7

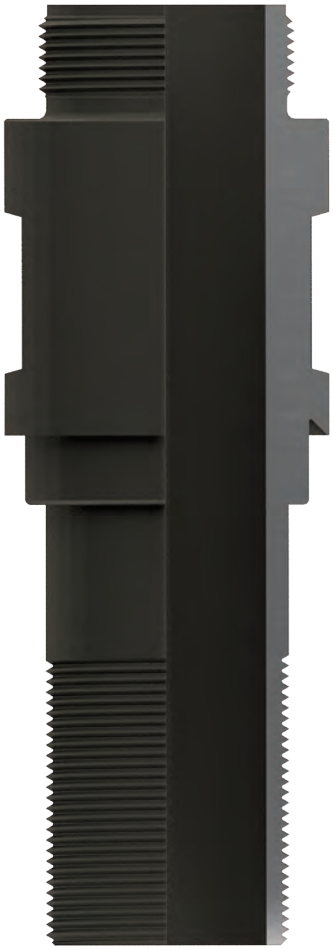

SIMPLEX MECHANICAL

Tubing	Part Numbers
2-3/8"	0658-1023-X0
2-7/8"	0658-2023-X0
3-1/2"	0658-3023-X0

MATERIAL CODES	
41X0	2
NCA 400	5
316 SS	7

BRASS WEDGE RING & 3 CUP TYPE, 5 CUP TYPE

Tubing Size	No-Go	Material	Part Numbers
2-7/8"	2.339"	41X0	0699-8525-20
2-7/8"	2.339"	304SS	0699-8525-30
2-7/8"	2.339"	NCA 400	0699-8525-50

3 CUP TYPE, BRASS SLEEVE

Tubing Size	No-Go	ID	Material	Part Numbers
2-3/8"	1.895"	0.875"	41X0	0659-1076-20
2-7/8"	2.339"	1.250"	41X0	0699-8525-10

3 CUP, TYPE HR, OTIS TYPE

Tubing Size	No-Go	ID	Part Numbers
2-3/8"	1.899" -.001	0.88	0659-1066-X0
2-7/8"	2.337" -.001	1.25	0659-2066-X0

MATERIAL CODES	
10XX	1
41X0	2

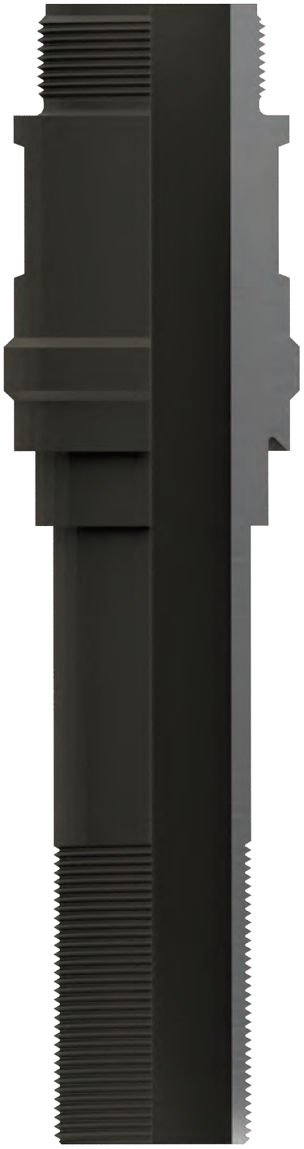

TYPE O CUPS, 3 CUP TYPE

Tubing Size	No-Go	Cup OD	CUP ID	ID	Material	Part Numbers	Wedge Ring	PSN
2-3/8"	1.865"	1-3/4" +70	1.440"	1.16"	10XX	0699-8707-10	0	0636-1210-12
2-3/8"	1.865"	1-3/4" +70	1.440"	1.16"	41X0	0699-8767-20	1	0636-1210-12
2-3/8"	1.899"	1-3/4" +70	1.440"	1.16"	41X0	0659-8745-20	1	0636-1210-12
2-7/8"	2.330"	2-1/4" +70	1.973"	1.63"	41X0	0699-8615-20	0	0636-1220-12

MATERIAL CODES	
41X0	2
NCA 400	5
PTFE Coated Steel	6

NIPPLES

Dura Products™
A DISTRIBUTION NOW™ COMPANY

ROD INSERT PUMP, API 3 CUP TYPE

These seating nipples are precision machined to assure concentricity and are honed to provide a smooth sealing surface on the I.D.

Tubing	Thread	API Number	I.D.[1]	Length	Cup Size	Uncoated	Nickel Plated
1.900"	1.900" 10RD IJ	N11-15	1.460	6"	1-1/2" -10	0636-1270-X3	—
2.063"	1.900" 10RD EUE	—	1.540	6"	1-1/2" +70	0636-2170-X5	—
2-3/8"	2-3/8" 8RD EUE	N11-20	1.780	12"	1-25/32" +30	0636-1210-X2	0636-1054-12
2-7/8"	2-7/8" 8RD EUE	N11-25	2.280	12"	2-1/4" +70	0636-1220-X2	0636-2054-12
3-1/2"	3-1/2" 8RD EUE	N11-30	2.780	12"	2-3/4" +70	0636-1230-X2	0636-3054-12

1 - Dimension has a tolerance of +.010/-.000".

MATERIAL CODES	
10XX	1
316 SS	3
NCA 400	5

TUBING PUMP, API 2 CUP TYPE

The 2-Cup seating nipple is used with 2-cup standing valves. These nipples are externally threaded and incorporate a 9 degree tapered stop in the lower end to receive the seating cup coupling. Precision machining assures concentricity and the polished I.D. provides a smooth seal area.

Tubing	Thread	API Number	Cup Size	Lower Pipe Connection	A	B	Part Number
2-3/8"	2-3/8" 8RD EUE	N13-20	1-3/4" - 10	1-1/2" API LP	1.710	1.381	0636-1410-X5
2-7/8"	2-7/8" 8RD EUE	N13-25	2-1/4" -10	2" API LP	2.210	1.842	0636-1420-X5
3-1/2"	3-1/2" 8RD EUE	N13-30	2-3/4" -10	2-1/2" AP LP	2.710	2.302	0636-1430-X5

MATERIAL CODES	
Steel	1
Stainless Steel	3

API MECHANICAL BOTTOM LOCK

This nipple is used with the mechanical bottom lock hold-down. Both ends incorporate external tubing threads and the lower end is internally threaded to receive a gas anchor or strainer nipple. The upper end has a 15 degree internal tapered seal surface to receive the seating ring.

Tubing	Thread	API Number	Lower Pipe Connection	A	B	Part Number
2-3/8"	2-3/8" 8 RD EUE	N12-20	1-1/2" API LP	1.50	1.375	0636-0110-X5
2-7/8"	2-7/8" 8 RD EUE	N12-25	2" API LP	1.88	1.750	0636-2051-X5
3-1/2"	3-1/2" 8 RD EUE	N12-30	2-1/2" API LP	2.38	2.250	0636-0130-X5
4-1/2"	4-1/2" 8 RD EUE	N12-40	3" API LP	3.16	3.000	0636-0140-X5

MATERIAL CODES	
Steel	1
Stainless Steel	3
Steel with Electroless Nickel	6

SIMPLEX MECHANICAL

The DURA Simplex seating assembly can be used for either a top or bottom hold-down pumps. The lock seat (B) is clamped firmly between the two halves of the nipple and receives the seating ring of the Simplex hold-down. This forms the seal and also acts as a no-go for the pump.

The lock seat is made of heat treated stainless steel to provide extended service life.

Item	Description	# Req'd	2-3/8"	2-7/8"	3-1/2"
A	Upper Half - 8 RD EUE	1	0636-0610-X5	0636-0620-X5	0636-0630-X5
B	Stainless Seat	1	0636-0710-30	0636-0720-30	0636-0730-30
	I.D.		1.781"	2.281"	2.781"
C	Lower Half - 8 RD EUE	1	0636-0810-X5	0636-0820-X5	0636-0830-X5

MATERIAL CODES	
Steel with Electroless Nickel	6

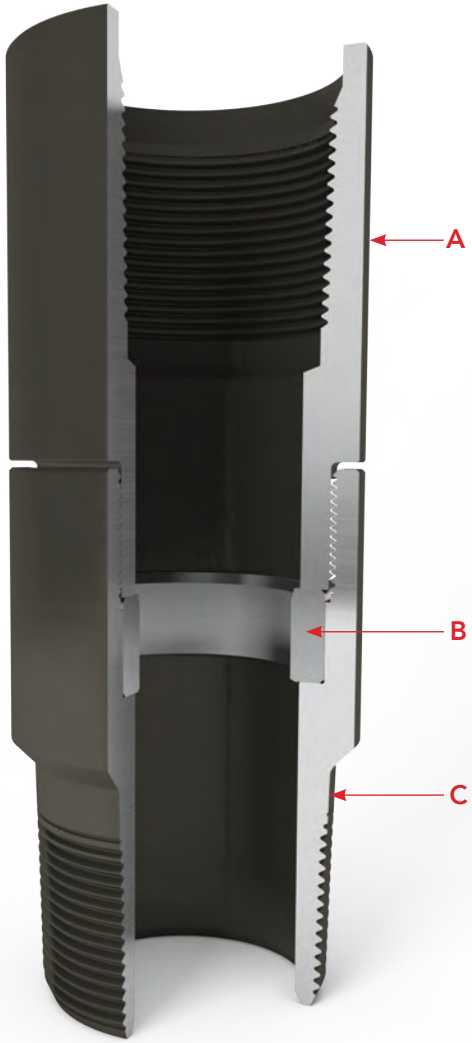

FRICTION SEAL

Tubing	Thread	I.D.	Part Number
2-3/8"	2-3/8" 8 RD EUE	1.790	0636-5210-X2
2-7/8"	2-7/8" 8 RD EUE	2.290	0636-5220-X2
			0636-7220-22[1]
3-1/2"	3-1/2" 8 RD EUE	2.790	0636-5230-X2
4-1/2"	4-1/2" 8 RD EUE	3.790	0636-5240-X2
5-1/2"	5-1/2" 8RD-LTC	4.562	0636-6055-20[2]

MATERIAL CODES	
10XX	1
41X0	2

1- Part is electroless nickel coated.
2- Part is made from 41X0 or L80 material.

STRAINER

Description			Part Numbers		
Size	Thread	Length	Steel	Brass	PTFE[1]
3/4"	14 V API LP	6"	0639-1407-10	—	—
3/4"	14 V API LP	12"	0639-1407-20	—	0639-6007-20
1"	11.5 V API LP	6"	0639-1410-10	0639-1410-40	—
1"	11.5 V API LP	12"	0639-1410-20	0639-1410-41	0639-6010-12
1"	11.5 V API LP	24"	0639-1410-26	0639-1410-42	0639-6010-24
1-1/4"	11.5 V API LP	6"	0639-1412-10	0639-1412-40	—
1-1/4"	11.5 V API LP	12"	0639-1412-20	0639-1412-41	0639-6012-12
1-1/4"	11.5 V API LP	18"	0639-1412-24	—	—
1-1/4"	11.5 V API LP	24"	0639-1412-26	0639-1412-42	0639-6012-24
1-1/2"	11.5 V API LP	6"	0639-1415-10	—	—
1-1/2"	11.5 V API LP	24"	0639-1415-24	0639-1415-42	0639-6015-24

1- PTFE coated steel

NUTS

Dura Products™
A DISTRIBUTION NOW® COMPANY

CUP TYPE HOLD DOWN

Size	Cup Type	API Number	Part Numbers
1.900"	O	—	0658-7005-X0
2.063"	O	—	0658-8005-X0
2-3/8"	HR	S14-20	0658-1005-X0
2-7/8"	HR	S14-25	0658-2005-X0
3-1/2"	HR	S14-30	0658-3005-X0

MATERIAL CODES	
10XX	1
41X0	2
304 SS	3
Brass	4
NCA 400	5
PTFE Steel	6
316 SS	7

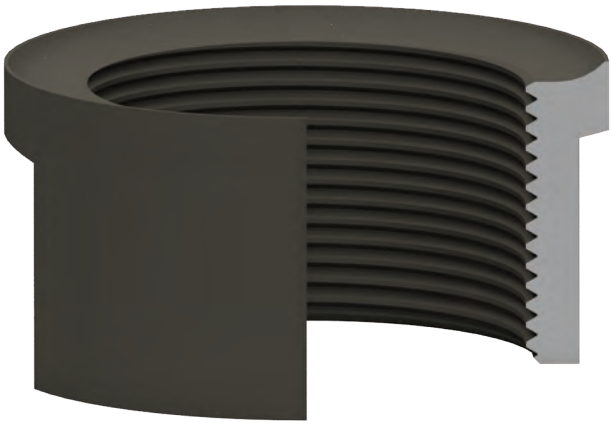

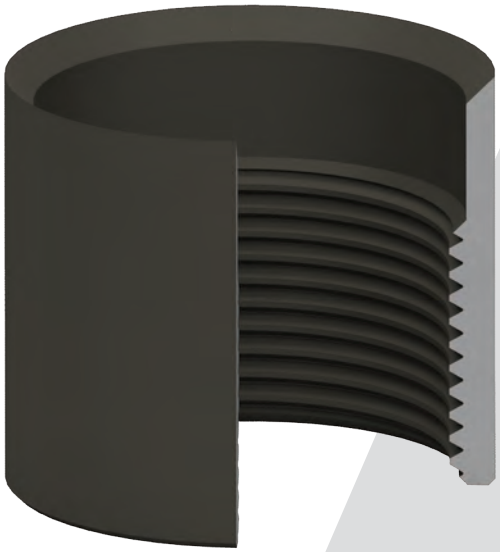

CUP PLUNGER / CUP ADAPTER

Plunger Size	Steel
1-1/2"	0640-1507-X0
1-3/4"	0640-1707-X0
2"	0640-2007-X0
2-1/4"	0640-2207-X0
2-1/2"	0640-2507-X0

MATERIAL CODES	
10XX	1
41X0	2
304 SS	3
PTFE Steel	6
316 SS	7

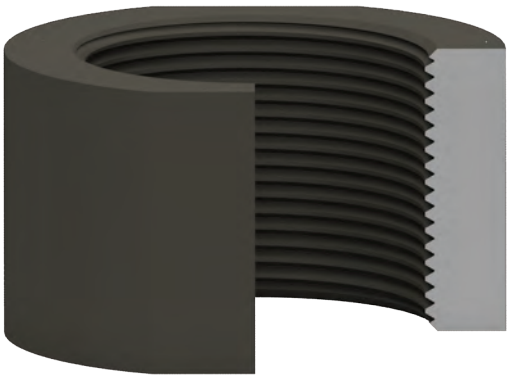

ON-OFF TOOLS

Dura Products
A DISTRIBUTION NOW COMPANY

ASSEMBLIES

These On-Off tools are efficient and easy to use. To latch or lock the tool, the sucker-rod string is lowered onto the valve-rod or sucker-rod already in the well. The tool will engage correctly with the rods since the tool is self-aligning. By setting the weight of the sucker-rod string on the tool it will latch and lock on the rod. By lifting the rod string, the rig crew will be able to tell if the plunger is attached by increase in weight. To release the tool, lower the pump or plunger to the top or bottom of the stroke and then turn the rods to the RIGHT (left-hand tools are available on special order).

To release a left-handed tool the procedure is the opposite of a right-handed tool. New left-handed tools are marked with red tape and have "L.H." stamped on the wrench flat.

STANDARD TOOLS					
Tool O.D.	Rod Thread	Release	Material	Browning Oil Tools Number	Dura Products Part Numbers
1.800"	3/4"	Right-Hand	Regular	TK-100	0699-0090-16
1.800"	7/8"	Right-Hand	Regular	TK-100	0699-0100-17
2.225"	7/8"	Right-Hand	Regular	TK-110	0699-0110-21
2.225"	7/8"	Left-Hand	Regular	TK-110	0699-0110-87
2.312"	7/8"	Right-Hand	Regular	TK-120	0699-0120-17
2.740"	1"	Right-Hand	Regular	TK-130	0699-0130-18

MAGNUM TOOLS*					
Tool O.D.	Rod Thread	Release	Material	Browning Oil Tools Number	Part Numbers
1.800"	3/4"	Right-Hand	Regular	TM-100	0699-1100-16
1.800"	7/8"	Right-Hand	Regular	TM-100	0699-1100-17
2.312"	7/8"	Right-Hand	Regular	TM-100	0699-0120-18
2.312"	7/8"	Right-Hand	Regular	TMX-120**	0699-0120-19

* Heavier build
** Extra heavy duty build

REPLACEMENT PARTS

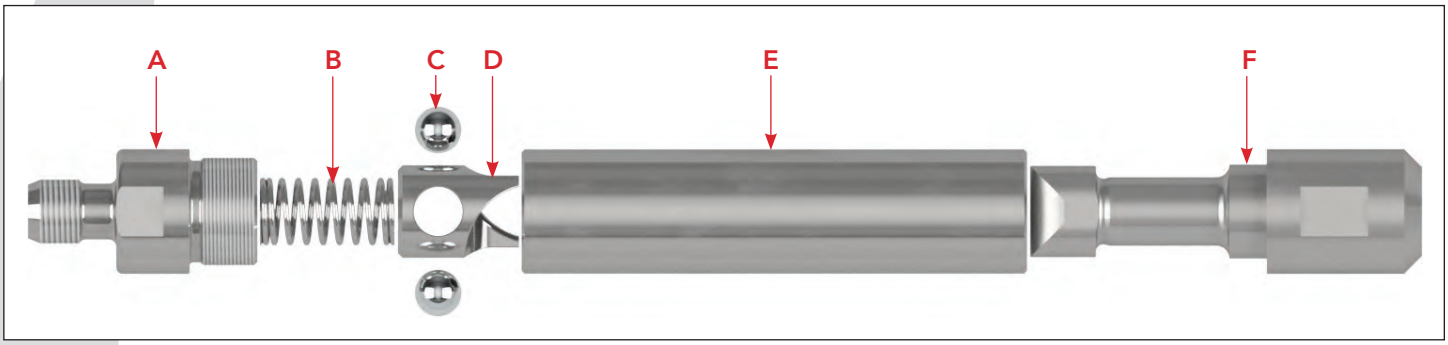

Standard Tool			TK-100 7/8" PIN	TK-110	TK-120
Item	Description	# Req'd	1.800" O.D.	2.225" O.D.	2.312" O.D.
A	Top Bushing	1	0699-0101-10	0699-0101-10	0699-0121-10
B	Spring	1	0699-0102-10	0699-0102-30	0699-0102-30
C	Guide Ball	2	0699-0104-10	0699-0104-10	0699-0124-10
D	Locking Pawl	1	0699-0103-10	0699-0103-10	0699-0123-10
E	Body	1	0699-0105-10	0699-0105-10	0699-0125-10
F	Bottom Latch	1	0699-0106-10	0699-0106-10	0699-0126-10

Magnum Tool			TM-120	TMX-120
Item	Description	# Req'd	2.312" O.D.	2.312" O.D.
A	Top Bushing	1	0699-0121-10	0699-0121-21
B	Spring	1	0699-0102-30	0699-0102-31
C	Guide Ball	2	0699-0124-10	0699-0114-10
D	Locking Pawl	1	0699-0123-10	0699-0113-10
E	Body	1	0699-0125-20	0699-0125-21
F	Bottom Latch	1	0699-0126-20	0699-0126-21

PLUG

Dura Products™
A DISTRIBUTION NOW™ COMPANY

PLUG, SEAT

Plunger Size	Clutched	API Number	Part Numbers
1-1/4"	N	P12-125	0639-0512-X0
1-1/2"	N	P12-150	0639-0515-X0
1-3/4"	N	P12-175	0639-0517-X0
2"	N	P12-200	0639-0520-X0
2" Oversize	N	—	0639-0521-X1
2-1/4"	Y	—	0639-0522-X1
2-1/2" / 2-3/4"	Y	P12-250	0639-0525-X0
3-1/4"	Y	—	0638-3298-0X
3-3/4"	Y	—	0638-3798-0X

MATERIAL CODES	
Steel	1
304 SS	3
NCA 400	5
PTFE Steel	6
316 SS	7

PLUG, SEAT, FLUSHMOUNT

Plunger Size	Type	Part Numbers
1-1/4"	9/16" HEX	0639-0512-X1
1-1/2"	3/4" HEX	0639-0515-X1
1-3/4"	3/4" HEX	0639-0517-X1
2"	7/8" HEX	0639-0520-X1

MATERIAL CODES	
Steel	1
304 SS	3
Brass	4
PTFE Steel	6

PLUNGERS

DURA PRODUCTS offers a complete line of plungers, with either chrome or spray-metal coatings, the hardest, most corrosion resistant metals available. Each plunger and/or plunger component must meet DURA'S metallurgical and precision standards, as well as the dimensional standards of API 11AX.

SPRAY-METAL - A spray-metal one piece design plunger recommended for the most severe corrosive and abrasive conditions. These plungers are made by fusing a 56/60 RC hardness Nickel base surfacing alloy to the O.D. of a thick walled seamless steel tube. The surfacing alloy is highly resistant to spalling and flaking and the extremely low coefficient of friction makes it ideally suited where wear is a problem. Duralloy plungers are furnished with box or pin-end thread terminals in popular sizes and lengths, and are also available with Nickel Copper Alloy 400 (NCA 400)[1] pins for added protection against corrosion.

SPRAY-METAL W/NCA 400 PINS - The same physical characteristics as the standard Duralloy plunger except for the addition of NCA 400 pins. The Monel pin-end plunger is ideal where severe corrosive conditions exist. This plunger meets all API IIAX specifications for plungers.

CARBIDE SPRAYED - Designed for extreme sand conditions. It is a Carbide spray-metal plunger available with either pin or box ends. The surface hardness obtained with Dura's unique process is equal to a 72 RC. This plunger when used with the Sandwiper is Dura's most abrasive resistant offering.

Dura Products™
A DISTRIBUTION NOW™ COMPANY

SPRAY METAL PIN END PLUNGER

Plunger Size			Standard Plunger Fit				
Base O.D.	API Number	Part Numbers	Base Minus				
			.001"	.002"	.003"	.004"	.005"
1-1/4"	P21-125	0629-120X-XX	49	48	47	46	45
1-1/2"	P21-150	0629-140X-XX	99	98	97	96	95
1-3/4"	P21-175	0629-170X-XX	49	48	47	46	45
2"	P21-200	0629-190X-XX	99	98	97	96	95
2-1/4"	P21-225	0629-220X-XX	49	48	47	46	45
2-1/2"	P21-250	0629-240X-XX	99	98	97	96	95
2-3/4"	P21-275	0629-270X-XX	49	48	47	46	45
3-1/4"	—	0629-320X-XX	49	48	47	46	45
3-3/4"	P21-375	0629-370X-XX	49	48	47	46	45

Notes:

First "X" in a part number is the nominal length in feet.

"-XX" in a part number is fit as listed on the right of the chart.

A 2" O.D. x 3' plunger with -.002" fit would be 0629-1903-98.

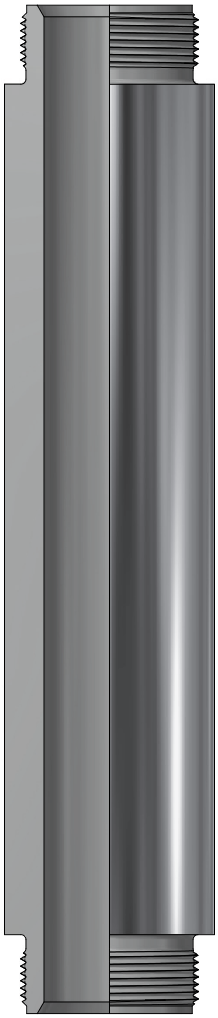

SPRAY METAL PIN END PLUNGER ASSEMBLED W/ NCA 400 PINS

Plunger Size		Part Numbers		Standard Plunger Fit				
Base O.D.	API Number	Spray Metal w/NCA 400 Pins	Spray Metal w/ NCA 400 Pins & Nickel I.D.	Base Minus				
				.001"	.002"	.003"	.004"	.005"
1-1/4"	P22-125	0630-120X-XX	0660-120X-XX	49	48	47	46	45
1-1/2"	P22-150	0630-140X-XX	0660-140X-XX	99	98	97	96	95
1-3/4"	P22-175	0630-170X-XX	0660-170X-XX	49	48	47	46	45
2"	P22-200	0630-190X-XX	0660-190X-XX	99	98	97	96	95
2-1/4"	P22-225	0630-220X-XX	0660-220X-XX	49	48	47	46	45

Notes:

First "X" in the part number is nominal length in feet.

"-XX" in a part number is fit as listed on the right of the chart.

A 2" O.D x 4' Plunger w/NCA 400 pins with -.003" fit would be 0630-1904-97.

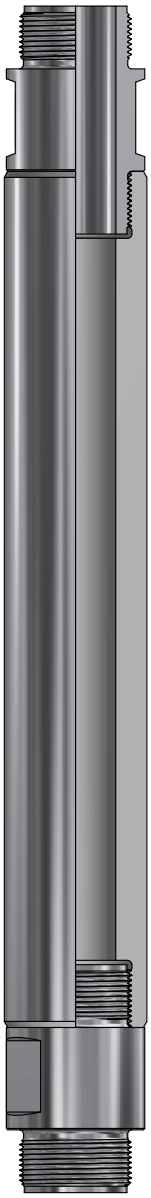

SPRAY METAL BOX END PLUNGER

Plunger Size		Part Numbers			Standard Plunger Fit				
					Base Minus				
Base O.D.	API Number	Spray Metal	Spray Metal w/ Nickel I.D.	Carbide	.001"	.002"	.003"	.004"	.005"
1-3/4"	P23-175	0649-170X-XX	0665-170X-XX	0607-170X-XX	49	48	47	46	45
2"	—	0649-190X-XX	0665-190X-XX	0607-190X-XX	99	98	97	96	95
2-1/4"	P23-225	0649-220X-XX	0665-220X-XX	0607-220X-XX	49	48	47	46	45
2-1/2"	—	0649-240X-XX	0665-240X-XX	0607-240X-XX	99	98	97	96	95
2-3/4"	P23-375	0649-270X-XX	0665-270X-XX	0607-270X-XX	49	48	47	46	45
3-1/4"	—	0649-320X-XX	0665-320X-XX	0607-320X-XX	49	48	47	46	45
3-3/4"	P23-375	0649-370X-XX	0665-370X-XX	0607-370X-XX	49	48	47	46	45

Notes:

First "X" in the part number is nominal length in feet.

"-XX" in a part number is fit as listed on the right side of chart.

A 2-1/4" O.D. x 5' Metal Spray w/Nickel I.D. with -.005" fit would be 0665-2205-45.

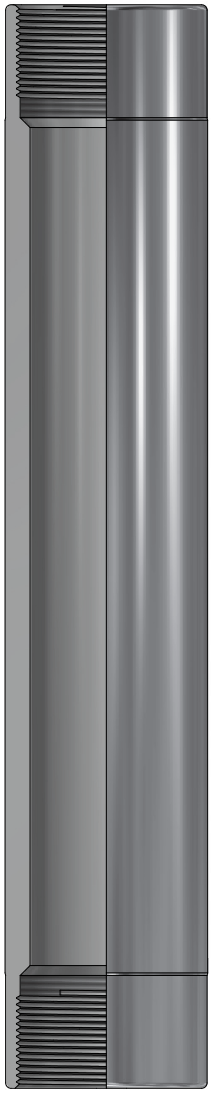

SPRAY METAL PRESSURE ACTUATED PLUNGER

Size	Plunger w/ Nylon Rings	Plunger only
1-1/4"	0652-12AA-00	0652-12AA-XY
1-1/2"	0652-14AA-00	0652-14AA-XY
1-3/4"	0652-17AA-00	0652-17AA-XY
2"	0652-19AA-00	0652-19AA-XY
2-1/4"	0652-22AA-00	0652-22AA-XY
2-1/2"	0652-24AA-00	0652-24AA-XY
2-3/4"	0652-27AA-00	0652-27AA-XY
3-1/4"	0652-32AA-00	0652-32AA-XY
3-3/4"	0652-37AA-00	0652-37AA-XY

MATERIAL CODES (X)	
10XX	0
PTFE Coated 10XX	6
Electroless Nickel Plated	7

# of Rings (AA)
20
40
60
80

PLUNGER FIT (Y)	
Base Minus	
4	.004"
5	.005"
1	.007"

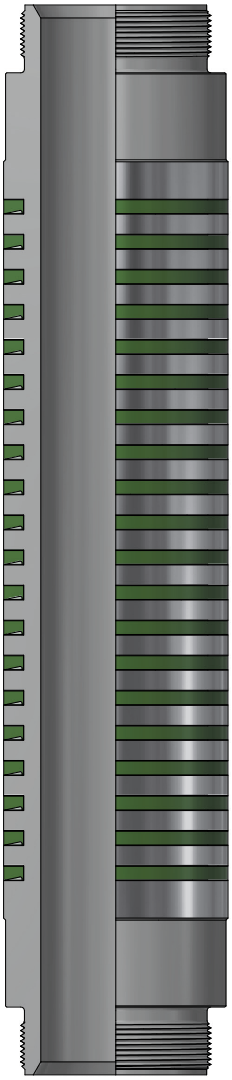

PRESSURE ACTUATED PLUNGER RINGS

Size	Green Nylon	Black XT
1-1/4"	0652-1200-20	0652-1200-50
1-1/2"	0652-1400-20	0652-1400-50
1-3/4"	0652-1700-20	0652-1700-50
2"	0652-1900-20	0652-1900-50
2-1/4"	0652-2200-20	0652-2200-50
2-1/2"	0652-2400-20	0652-2400-50
2-3/4"	0652-2700-20	0652-2700-50
3-1/4"	0652-3200-20	0652-3200-50
3-3/4"	0652-3700-20	0652-3700-50

The GREEN NYLON ring is made of heat stabilized, lubricated, impact resistant super-tough nylon 6 resins; the most flexible of the Zytel Nylon resin line. It is used in applications requiring high resistance to oils, gasoline, grease and salt solutions. It is also used extensively in environments containing lubricating oil, grease and aliphatic and aromatic hydrocarbons. Melt temperature is 504°F (262°C), with upper recommended service temperature at 262°F (128°C).

The XT resin is a high performance, mechanically tough, fluoropolymer and offers an excellent balance of properties. The XT is inert to most solvents and chemicals, and is hydrolytically stable. Melt temperature is at 536°F (280°C), with upper recommended service temperature at 392°F (200°C).

CUP PLUNGER, PIN X PIN, 10 CUP

Item	QTY	Description	1-1/2	1-3/4"	2"
A	2	Bushing, Plunger	0608-2015-10	0608-1417-20	0608-1620-20
B	1	Tube	0640-1501-10	0640-1701-10	0640-2001-10
C	2	Brass Wear Ring	0640-1504-40	0640-1704-40	0640-2004-40
D	1	Spacer, Top	0640-1505-10	0640-1705-10	0640-2005-10
E	9	Spacer, Center	0640-1505-11	0640-1705-11	0640-2005-11
F	1	Spacer, Bottom	0640-1505-12	0640-1705-12	0640-2005-12
G	10	Cup, Hard Plastic	2231-1406-10	2231-1735-30	2231-8001-30
H	2	Nut, Lock	0640-1507-10	0640-1707-20	0640-2007-10

For alternate material options see the appropriate catalogue section.

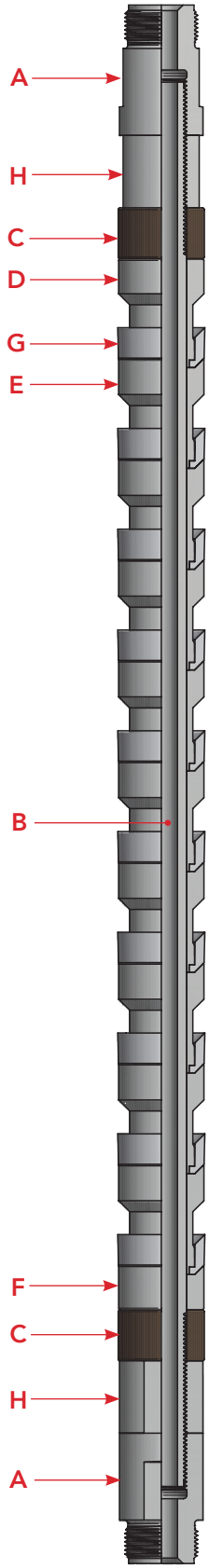

CUP PLUNGER, PIN X PIN, 12 CUP

Item	QTY	Description	2-1/4"
A	2	Bushing, Plunger	0608-1422-20
B	1	Tube	0640-2201-12
C	2	Brass Wear Ring	0640-2204-40
D	1	Spacer, Top	0640-2205-10
E	11	Spacer, Center	0640-2205-10
F	1	Spacer, Bottom	0640-2205-12
G	12	Cup, Hard Plastic	2231-8003-60
H	2	Nut, Lock	0640-2207-10

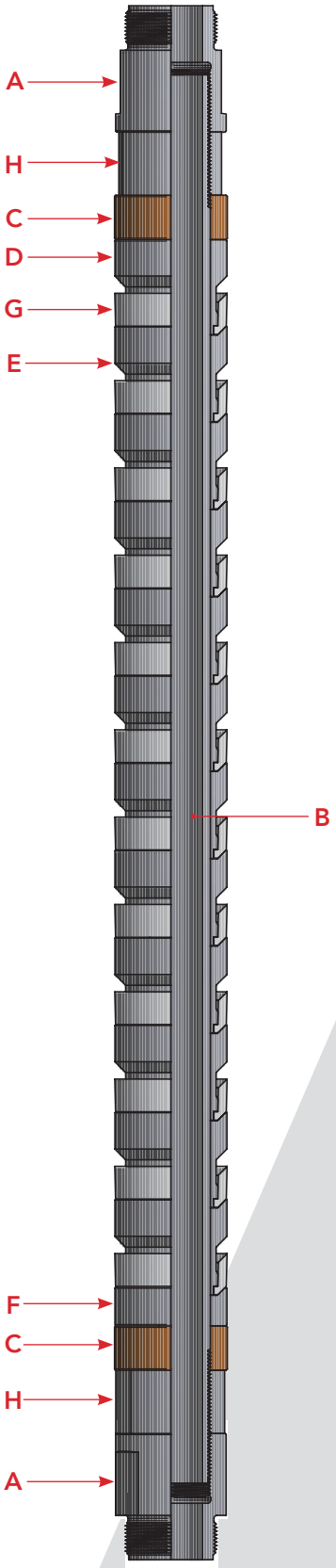

CUP PLUNGER, PIN X BOX, 10 CUP

Item	QTY	Description	1-1/2"	1-3/4"	2"	2-1/2"
A	1	Bushing, Plunger	0608-2015-10	0608-1417-20	0608-1620-20	0608-1425-20
B	1	Tube	0640-1501-10	0640-1701-10	0640-2001-10	0640-2501-10
C	2	Brass Wear Ring	0640-1504-40	0640-1704-40	0640-2004-40	0640-2504-40
D	1	Spacer, Top	0640-1505-10	0640-1705-10	0640-2005-10	0640-2505-10
E	9	Spacer, Center	0640-1505-11	0640-1705-11	0640-2005-11	0640-2505-11
F	1	Spacer, Bottom	0640-1505-12	0640-1705-12	0640-2005-12	0640-2505-12
G	10	Cup, Hard Plastic	2231-1406-10	2231-1735-30	2231-8001-30	2231-2501-30
H	2	Nut, Lock	0604-1507-10	0640-1707-20	0640-2007-10	0640-2507-10
I	1	Coupling, Plunger	0628-1715-20	0628-1717-20	0628-1720-20	0628-1725-20
Assembly of A-I			0640-1512-10	0640-1712-10	0640-2012-10	0640-2512-10

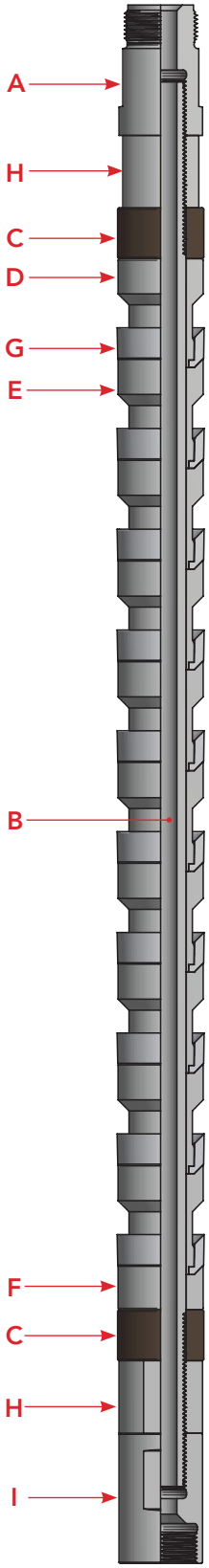

SPRAY METAL GROOVED PIN END PLUNGER

Plunger Size			Standard Plunger Fit				
			Base Minus				
Base O.D.	API Number	Part Numbers	.003"	.004"	0.005"	.006"	.007"
1-1/4"	P21-125	0682-120X-XX	47	46	45	44	43
1-1/2"	P21-150	0682-140X-XX	97	96	95	94	93
1-3/4"	P21-175	0682-170X-XX	47	46	45	44	43
2"	P21-200	0682-190X-XX	97	96	95	94	93
2-1/4"	P21-225	0682-220X-XX	47	46	45	44	43
2-1/2"	P21-250	0682-240X-XX	97	96	95	94	93
2-3/4"	P21-275	0682-270X-XX	47	46	45	44	43
3-1/4"	—	0682-320X-XX	47	46	45	44	43
3-3/4"	P21-375	0682-370X-XX	47	46	45	44	43

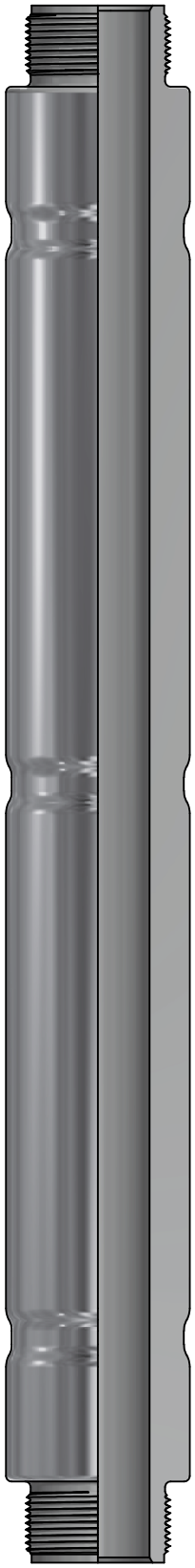

Notes:

First "X" in a part number is the nominal length in feet.

"-XX" in a part number is fit as listed on the right of the chart.

A 2" O.D. x 3' plunger with -.007" fit would be 0682-1903-93.

SPRAY METAL GROOVED PIN END PLUNGER ASSEMBLED W/ NCA 400 PINS

Plunger Size		Part Numbers		Standard Plunger Fit				
				Base Minus				
Base O.D.	API Number	Metal Spray w/NCA 400 Pins	Metal Spray w/NCA 400 Pins & Nickel I.D.	.003"	.004"	0.005"	.006"	.007"
1-1/4"	P22-125	0680-120X-XX	0681-120X-XX	47	46	45	44	43
1-1/2"	P22-150	0680-140X-XX	0681-140X-XX	97	96	95	94	93
1-3/4"	P22-175	0680-170X-XX	0681-170X-XX	47	46	45	44	43
2"	P22-200	0680-190X-XX	0681-190X-XX	97	96	95	94	93
2-1/4"	P22-225	0680-220X-XX	0681-220X-XX	47	46	45	44	43

Notes:

First "X" in a part number is nominal length in feet.

"-XX" in a part number is fit as listed on the right of the chart.

A 2" O.D x 4' Plunger w/NCA 400 pins with -.003" fit would be 0680-1904-97.

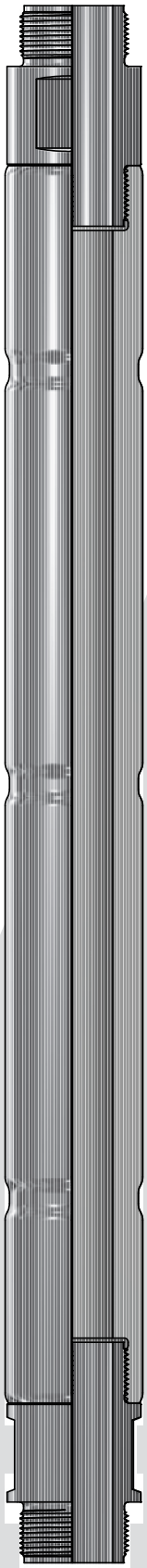

SPRAY METAL GROOVED BOX END PLUNGER

Plunger Size		Part Numbers	Standard Plunger Fit				
			Base Minus				
Base O.D.	API Number		.003"	.004"	.005"	.006"	.007"
1-3/4"	P23-175	0689-170X-XX	47	46	45	44	43
2"	—	0689-190X-XX	97	96	95	94	93
2-1/4"	P23-225	0689-220X-XX	47	46	45	44	43
2-1/2"	—	0689-240X-XX	97	96	95	94	93
2-3/4"	P23-375	0689-270X-XX	47	46	45	44	43
3-1/4"	—	0689-320X-XX	47	46	45	44	43
3-3/4"	P23-375	0689-370X-XX	47	46	45	44	43

Notes:

First "X" in a part number is nominal length in feet.

"-XX" in a part number is fit as listed on the right of the chart.

A 2-1/4" O.D x 5' Metal Spray with -.005" fit would be 0689-2205-45.

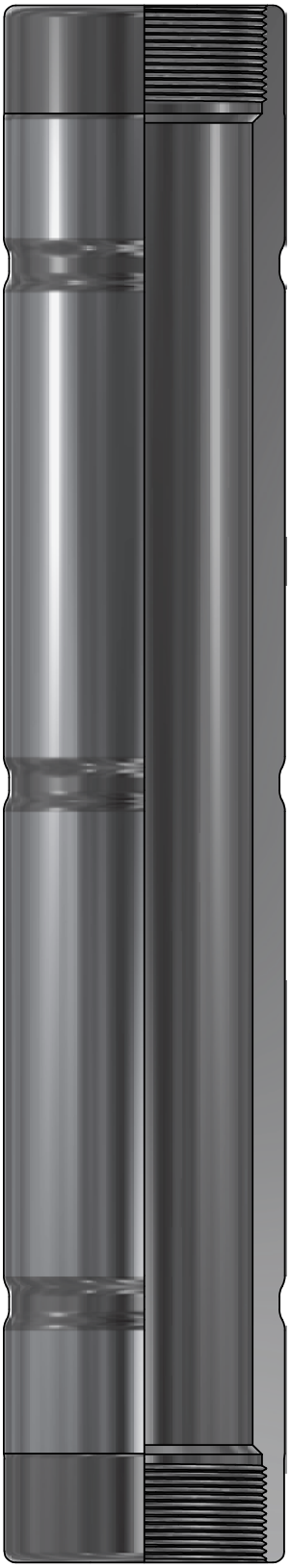

PULL TUBE

Dura Products™
A DISTRIBUTION NOW™ COMPANY

		Part Numbers			
Pull Tube O.D	**Pull Tube I.D**	**Steel**	**ENC**	**Hard ENC**	**Spray Metal**
15/16"	5/8"	0662-122X-XX	—	0662-125X-XX	—
1-1/8"	13/16"	0662-701X-XX	0662-707X-XX	0662-705X-XX	0662-706X-XX
1-1/2"	1-1/8"	0662-201X-XX	0662-207X-XX	0662-205X-XX	0662-206X-XX*
1-7/8"	1-3/8"	0662-251X-XX	—	—	—
2-3/8"	1.995"	0662-321X-XX	—	—	—

Last 3 digits X-XX represent length in inches.
*0662-206X-XX has a finished OD of 1.530.
Note: ENC is electroless-nickel coating good for corrosion; Hard ENC is heat-treated electroless-nickel coating good for wear. Other coatings may be available upon request.
Contact plant for details on available lengths.

Pull Tube Info			
Pull Tube O.D	15/16	1-1/8"	1-1/2"
Pull Tube I.D.	5/8"	13/16"	1-1/8"
API Numbers	T11-125	T11-150	T11-200
Standard Pump Sizes	1-1/4"	1-1/2"	1-3/4", 2", 2-1/2", 2-3/4"

PULLER

Dura Products™
A DISTRIBUTION NOW® COMPANY

TAP TYPE

Item	Description	1-3/4"	2-1/4"	2-3/4"	3-3/4" Heavy Duty
A	Body	0654-0217-5X	0654-0222-5X	0654-0227-5X	0654-0237-7X
B	Housing	0654-0300-0X	0654-0300-0X	0654-0300-0X	0654-0300-1X
C	NCA 400 Spring	0654-0400-06	0654-0400-06	0654-0400-06	0654-0400-06
D	Key Pin	0654-0500-0X	0654-0500-0X	0654-0500-0X	0654-0500-0X
E	Tap[1]	0654-0600-0X	0654-0600-0X	0654-0600-0X	0654-0600-0X
Assembly		0654-0117-5X	0654-0122-5X	0654-0127-5X	0654-0137-7X
API Numbers - Assembly		P31-175	P31-225	P31-275	P31-375

1 - Tap has different material options than the other components. See appropriate material chart.

MATERIAL CODES		
	A,B,C,D	E[1]
Steel	1	1
304 SS	3	—
NCA 400	5	—
PTFE Steel	6	—
316 SS	7	—
17-4PH SS	—	3
NCA K500	—	5
Electroless Nickel, Steel	—	7

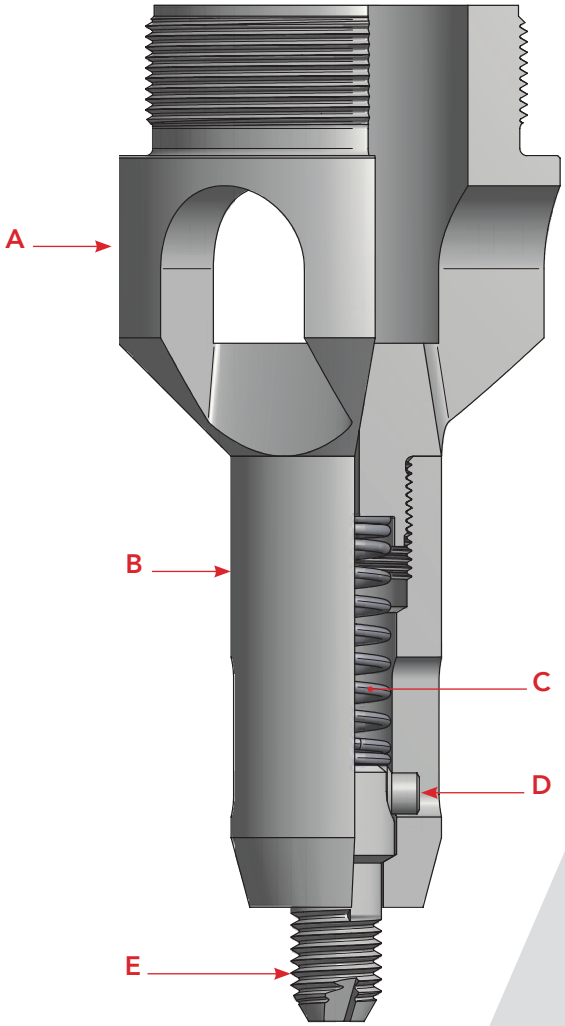

PRESSURE CONTROL REGULATOR

Dura Products™
A DISTRIBUTION NOW™ COMPANY

PRESSURE CONTROL REGULATOR

Item	Description	# Req'd	With "T"	With Cross
A	Adjusting Screw	1	0664-4214-12	0664-4214-12
B	Lock Nut	1	0664-4115-12	0664-4115-12
C	Bushing	1	0664-4213-12	0664-4213-12
D	'O' Ring	1	0664-4120-02	0664-4120-02
E	Follower	2	0664-4112-22	0664-4112-22
F	Spring - 250 psi (1,725 Kpa)	1	0664-4116-22	0664-4116-22
	Spring - 500 psi (3,450 Kpa)		0664-4117-22	0664-4117-22
	Spring - 1000 psi (6,900 Kpa)		6064-4118-22	0664-4118-22
	Spring - 1500 psi (10,350 Kpa)		0664-4125-22	0664-4125-22
G	Cage	1	0664-4222-12	0664-4222-12
H	Ball & Seat, 440C Stainless	1	0604-1718-00	0604-1718-00
I	Tee, 2", 11-1/2" V THD, 2000# Forged Steel	1	0664-4121-22	—
	Cross, 2", 11-1/2" V THD, 2000# Forged Steel		—	0664-4122-22
J	Seat Plug	1	0664-4111-12	0664-4111-12
K	Connector, 2", 11-1/2 V THD	1	0664-4110-12	0664-4110-12
L	1/4" Pipe Plug	1	—	—
Regulator, 2", 11-1/2 V THD C/W 250 psi Spring			0664-4204-02	0664-4204-22
Regulator, 2", 11-1/2 V THD C/W 500 psi Spring			0664-4201-02	0664-4201-22
Regulator, 2", 11-1/2 V THD C/W 1,000 psi Spring			0664-4202-02	0664-4202-22
Regulator, 2", 11-1/2 V THD C/W 1500 psi Spring			0664-4205-02	0664-4205-22

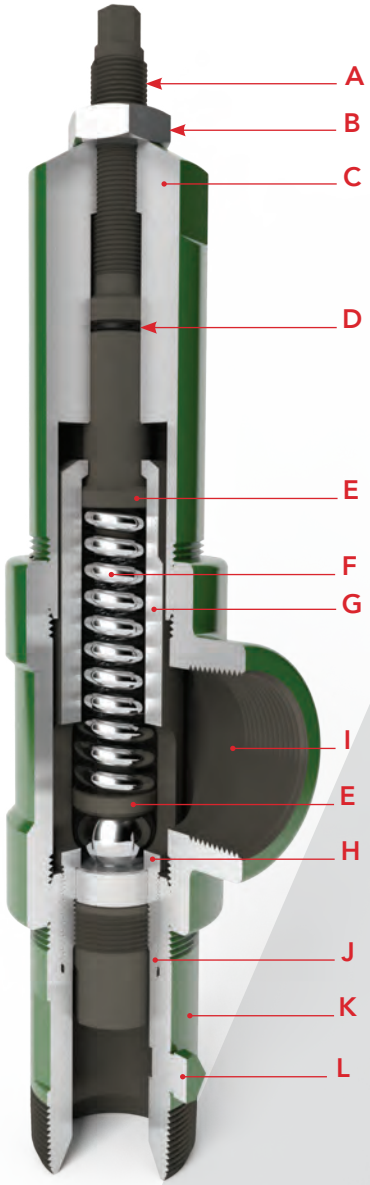

RINGS

Dura Products™
A DISTRIBUTION NOW® COMPANY

WEAR RING, CUP PLUNGER

Size	Part Numbers
1-1/2"	0640-1504-40
1-3/4"	0640-1704-40
2"	0640-2004-40
2-1/4"	0640-2204-40
2-1/2"	0640-2504-40

SEATING CUP RING

Hold Down	Cup Type	API Numbers	Part Numbers
1.900"	O	—	0658-7004-X0
2-3/8"	O	—	0699-8608-X0
2-3/8"	HR	S13-20	0658-1004-X0
2-7/8"	O	—	0699-8616-X0
2-7/8"	HR	S13-25	0658-2004-X0
3-1/2"	HR	S13-30	0658-3004-X0

MATERIAL CODE	
10XX	1
41X0	2
304 SS	3
Brass	4
NCA 400	5
PTFE Steel	6
316 SS	7

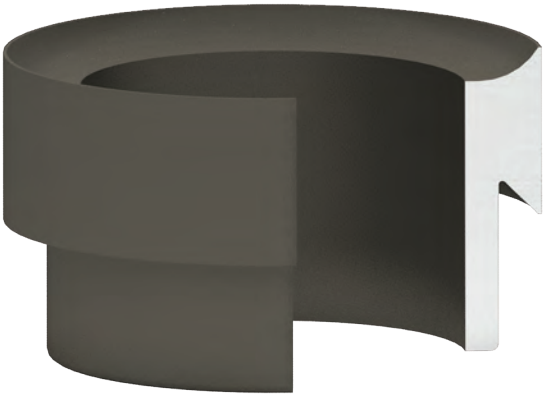

BARREL GUIDE

Tubing Size	Barrel Size	Material	Part Numbers
2-7/8"	1-1/4" RW	41X0	0699-8652-10
2-7/8"	1-1/2" RW	41X0	0699-8652-20
2-7/8"	1-1/2" RW	304 SS	0699-8652-30
3-1/2"	1-1/2" RW	41X0	0699-8652-21
3-1/2"	2" RW	41X0	0699-8731-20

SEATING, SIMPLEX LOCK

Hold Down Size	Ring O.D.	Stainless
2-3/8"	1.875"	0658-1022-30
2-7/8"	2.344"	0658-2022-30
3-1/2"	2.844"	0658-3022-30

CLUTCH RING FOR OVERSIZE TUBING PUMP STANDING VALVE

Pump Bore	Part Number	For Bushing
2-1/4"	0699-8720-11	0699-8720-10
2-3/4"	0699-8700-11	0699-8700-10

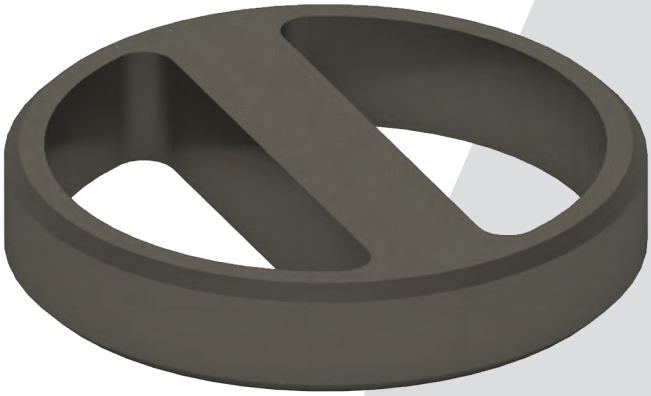

RODS

Dura Products™
A DISTRIBUTION NOW™ COMPANY

VALVE ROD SIZES

Description	11/16"	7/8"	1-1/16"
	R11-20	R11-25	R11-30
Plain Steel (unthreaded)	0656-072X-XX	0656-092X-XX	0656-112X-XX
Plain Steel: Threaded 1 End	0656-074X-XX	0656-094X-XX	0656-114X-XX
Plain Steel: Threaded 2 Ends	0656-075X-XX	0656-095X-XX	0656-115X-XX
Spray-Metal: Threaded 1 End	0656-079X-XX	0656-099X-XX	0656-119X-XX
Spray-Metal: Threaded 2 Ends	0656-078X-XX	0656-098X-XX	0656-118X-XX

Last 3 digits X-XX represent the length in inches.
Example: Plain Steel valve rod 11/16" x 288" long, threaded one end: 0656-0742-88

COMMON LENGTHS

Plain Steel, Unthreaded			
Part Number	Size	Length (in)	Length (ft)
0656-0723-00	11/16"	300	25
0656-0922-88	7/8"	288	24
0656-0923-60	7/8"	360	30
0656-1123-60	1-11/16" *	360	30

Spray Metal, Threaded			
Part Number	Size	Length (in)	Length (ft)
0656-0782-40	11/16"	240	20
0656-0782-88	11/16"	288	24
0656-0982-40	7/8"	240	20
0656-0982-88	7/8"	288	24
0656-0983-60	7/8"	360	30
0656-1182-88	1-11/16" *	288	24
0656-1183-60	1-11/16" *	360	30

*Typo: should be 1-1/16"

INSTRUCTIONS FOR SELECTING CORRECT VALVE ROD LENGTH

The chart on the following page lists lengths of API valve rod required for pumps with top or bottom hold-downs.

To calculate the length of valve rod required; add the nominal length of the barrel to the extensions (if required) and subtract the nominal length of the plunger. This difference is used in column (1) and the style of anchor employed to determine the length of valve rod.

Example 1: Top hold-down pump in 2-3/8" tubing with 12 ft barrel, no extensions, and 3 ft plunger: 12-3 = 9 ft; valve rod length in column 2 would be 109 inches.

Example 2: Bottom hold-down pump in 3-1/2" tubing with 16 ft barrel, 2 ft extensions at each end, a 4 ft plunger: 16+2+2-4 = 16 ft; valve rod length in column 5 would be 186 inches.

Note: When a double valve cage is used deduct 6 inches from valve rod length.

Dura Products
A DISTRIBUTIONNOW COMPANY

VALVE ROD LENGTH CHART

1	2	3	4	5
Nominal Barrel Length[a] Minus Nominal Plunger Length, ft (m)	For Pumps Run in 1.900, 2-3/8, and 2-7/8 in. (48.3, 60.3, and 73.0 mm) OD Tubing		For Pumps Run in 3-1/2 in. (88.9 mm) OD Tubing	
	Top Anchor, in. (m)	Bottom Anchor, in. (m)	Top Anchor, in. (m)	Bottom Anchor, in. (m)
1 (0.305)	13 (0.330)	7 (0.178)	12 (0.305)	6 (0.152)
2 (0.610)	25 (0.635)	19 (0.483)	24 (0.610)	18 (0.457)
3 (0.914)	37 (0.940)	31 (0.787)	36 (0.914)	30 (0.762)
4 (1.219)	49 (1.245)	43 (1.092)	48 (1.219)	42 (1.067)
5 (1.524)	61 (1.549)	55 (1.397)	60 (1.524)	54 (1.372)
6 (1.829)	73 (1.854)	67 (1.702)	72 (1.829)	66 (1.676)
7 (2.134)	85 (2.159)	79 (2.007)	84 (2.134)	78 (1.981)
8 (2.438)	97 (2.464)	91 (2.311)	96 (2.438)	90 (2.286)
9 (2.743)	109 (2.769)	103 (2.616)	108 (2.743)	102 (2.591)
10 (3.048)	121 (3.073)	115 (2.921)	120 (2.048)	114 (2.896)
11 (3.353)	133 (3.378)	127 (3.226)	132 (3.353)	126 (3.200)
12 (3.658)	145 (3.683)	139 (3.531)	144 (3.658)	138 (3.505)
13 (3.962)	157 (3.988)	151 (3.835)	156 (3.962)	150 (3.810)
14 (4.267)	169 (4.293)	163 (4.140)	168 (4.267)	162 (4.115)
15 (4.572)	181 (4.597)	175 (4.455)	180 (4.572)	174 (4.420)
16 (4.877)	193 (4.902)	187 (4.750)	192 (4.877)	186 (4.724)
17 (5.182)	205 (5.207)	199 (5.055)	204 (5.182)	198 (5.029)
18 (5.486)	217 (5.512)	211 (5.359)	216 (5.486)	210 (5.334)
19 (5.791)	229 (5.817)	223 (5.664)	228 (5.791)	222 (5.639)
20 (6.096)	241 (6.121)	235 (5.969)	240 (6.096)	234 (5.944)
21 (6.401)	253 (6.426)	247 (6.274)	252 (6.401)	246 (3.248)
22 (6.706)	265 (6.731)	259 (6.579)	264 (6.706)	258 (6.553)
23 (7.010)	277 (7.036)	271 (6.883)	276 (7.010)	270 (6.858)
24 (7.315)	289 (7.341)	283 (7.188)	288 (7.315)	282 (7.163)
25 (7.620)	301 (7.645)	295 (7.493)	300 (7.620)	294 (7.468)
26 (7.925)	313 (7.950)	307 (7.800)	312 (7.925)	306 (7.772)
27 (8.230)	325 (8.255)	319 (8.103)	324 (8.230)	318 (8.077)
28 (8.534)	337 (8.560)	331 (8.407)	336 (8.534)	330 (8.382)
29 (8.839)	349 (8.865)	343 (8.712)	348 (8.839)	342 (8.687)
30 (9.144)	361 (9.169)	355 (9.017)	360 (9.144)	354 (8.992)

[a] Including extensions on heavy wall barrels.

SEATS

Dura Products™
A DISTRIBUTION NOW® COMPANY

API MECHANICAL BOTTOM LOCK

Size	Seat	PSN
2-3/8"	0658-1014-X0	0636-0110-15
2-7/8"	0658-2014-X0	0636-2051-15
3-1/2"	0658-3014-X0	0636-0130-15
4-1/2"	0658-4014-X0	0636-0140-15

MATERIAL CODES	
Brass	4
NCA 400	5

Only Steel PSN's showns, see section N - Mechanical Bottom Lock PSNs for more options.

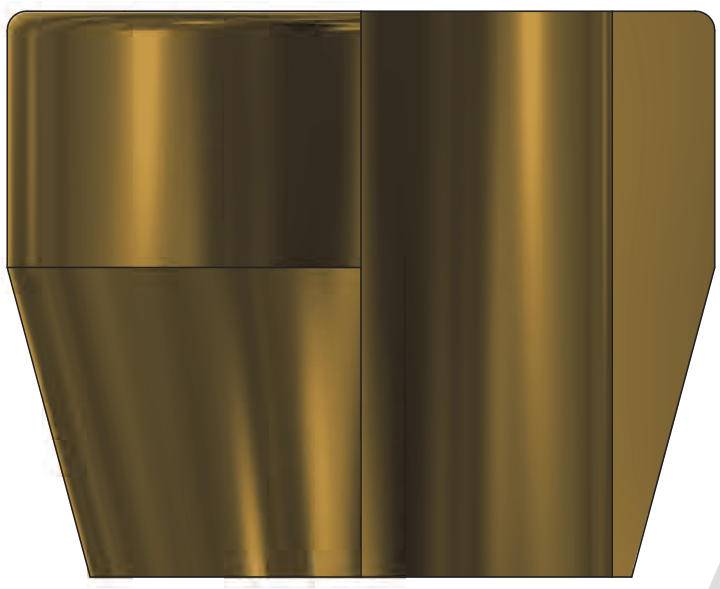

SIMPLEX MECHANICAL SEATING NIPPLE

Tubing	I.D. Of Seat	Part Numbers
2-3/8"	1.781"	0636-0710-30
2-7/8"	2.281"	0636-0720-30
3-1/2"	2.781"	0636-0730-30

Material is 440C stainless steel.

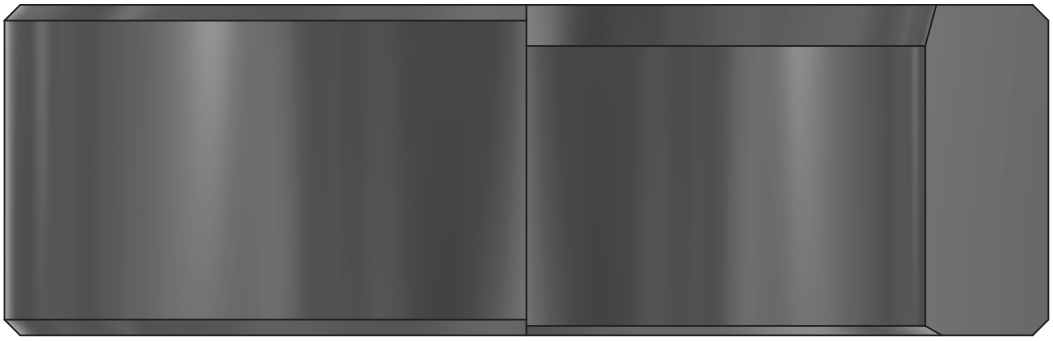

SPACER

Dura Products™
A DISTRIBUTION NOW™ COMPANY

CUP PLUNGER, WOOD TYPE

Plunger Size	Steel		
	Top	Center	Bottom
1-1/2"	0640-1505-X0	0640-1505-X1	0640-1505-X2
1-3/4"	0640-1705-X0	0640-1705-X1	0640-1705-X2
2"	0640-2005-X0	0640-2005-X1	0640-2005-X2
2-1/4"	0640-2205-X0	0640-2205-X1	0640-2205-X2
2-1/2"	0640-2505-X0	0640-2505-X1	0640-2505-X2

MATERIAL CODES	
Steel	1
304 SS	3
NCA 400	5
PTFE Steel	6
316 SS	7

TOP

CENTRE

BOTTOM

CUP ADAPTER, WOOD TYPE, SHORT

Assemblies for spacers are in the Wipers section of the catalogue.

Adapter Size	Steel		
	Top	Center	Bottom
1-1/2"	0640-1530-X0	0640-1530-X1	0640-1530-X2
1-3/4"	0640-1730-X0	0640-1730-X1	0640-1730-X2
2"	0640-2030-X0	0640-2030-X1	0640-2030-X2

MATERIAL CODES	
Steel	1
304 SS	3
NCA 400	5
PTFE Steel	6
316 SS	7

TOP

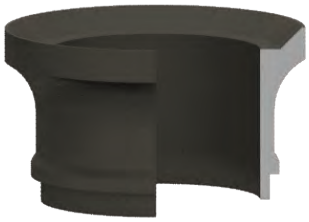

CENTRE

BOTTOM

STUFFING BOXES

Dura Products™
A DISTRIBUTION NOW® COMPANY

POLLUTION CONTROL CHECK VALVE (PCCV)

Description	Part Number
ASSEMBLY CONTAINS CAP, PTFE COATED BODY HALVES, FLAPPER ASSEMBLY, O-RINGS, AND PIPE PLUGS	0662-0062-30

PACKING CHAMBER OPTIONS

Item	Description	Material	1-1/4" Rod	1-1/2" Rod
A	GLAND	BRONZE	0664-0600-03	0664-0600-07
	GLAND SPLIT	BRONZE	0664-0601-03	0664-0601-07
	GLAND	DELRIN	0664-0600-63	0664-0600-67
B	PACKING	LUBRIKUP FLUID SEAL	0664-0800-93	0664-0800-97
C	PACKING RING	BRASS	0664-1300-03	0664-1300-07
	PACKING RING SPLIT	BRASS	0664-1300-23	0664-1300-27
	PACKING RING	DELRIN	0664-1300-63	0664-1300-67

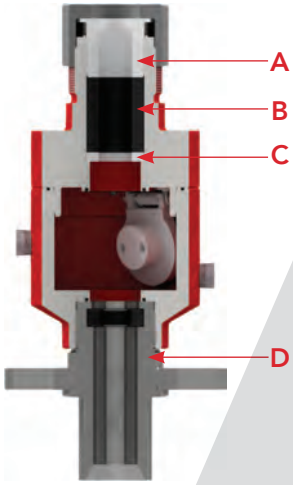

	Description	Part Number
D	HERCULES ADAPTER w/ GREASE RETAINER RINGS FOR 1-1/4 AND 1-1/2 POLISHED ROD	0664-8662-10
E	FLAPPER ASSEMBLY w/ FLAPPER, WEAR BLOCK, BRACKET, SPRING, SHAFT, CAP SCREWS (4), AND WASHERS (2)	0664-0062-80

Item E

POLLUTION CONTROL CHECK VALVE PARTS LIST

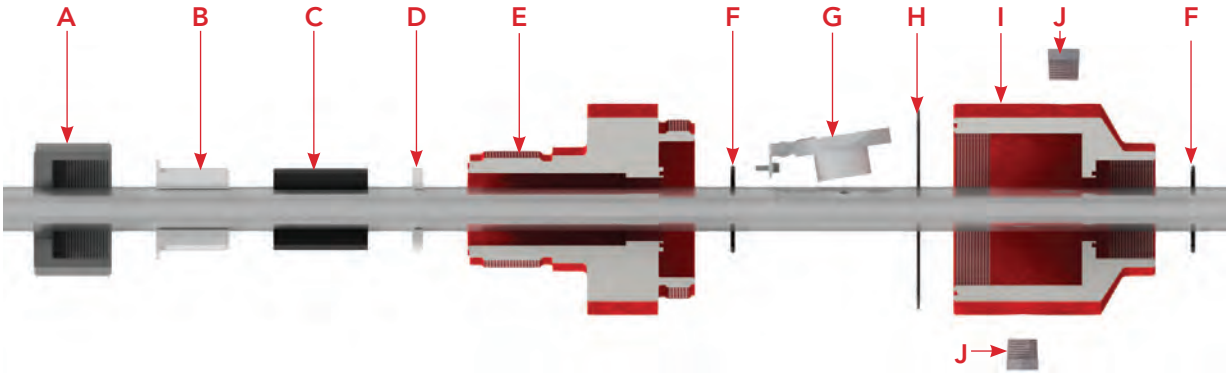

Item	Description	Qty	1-1/4" Rod	1-1/2" Rod
A	CAP, STEEL	1	0664-0200-01	0664-0200-01
B	GLAND, BRONZE	1	0664-0600-03	0664-0600-07
C	PACKING	1	0664-0800-93	0664-0800-97
D	PACKING RING, BRASS	1	0664-1300-03	0664-1300-07
E	UPPER BODY	1	0664-0062-06	0664-0062-06
F	SMALL O-RING	2	0664-3305-20	0664-3305-20
G	FLAPPER ASSEMBLY (CONSISTS OF THE FOLLOWING)	1	0664-0062-80	0664-0062-80
	FLAPPER, STAINLESS STEEL	1	0664-0062-04	0664-0062-04
	WEAR BLOCK, DELRIN	1	0664-0062-10	0664-0062-10
	SPRING, INCONEL	1	0664-4306-71	0664-4306-71
	BRACKET, STAINLESS STEEL	1	0664-0062-02	0664-0062-02
	SHAFT, STAINLESS STEEL	1	0664-4306-38	0664-4306-38
	WASHER, STAINLESS STEEL	2	0664-0801-03	0664-0801-03
	CAP SCREW, STAINLESS STEEL	4	F100-008C-0503	F100-008C-0503
H	LARGE O-RING	1	0664-3305-19	0664-3305-19
I	LOWER BODY	1	0664-0062-05	0664-0062-05
J	PIPE PLUGS	2	0664-0218-81	0664-0218-81

DUAL-PAC STUFFING BOX ASSEMBLIES

Description	1-1/4" Rod	1-1/2" Rod
2-3/8″ EUE PIN [60.3MM], WITH BRONZE GLAND, BRASS PACKING RING, AND PACK-OFF RING, WITHOUT PACKING & PACK-OFF ELEMENT	0664-1410-53	0664-1410-57
2-7/8″ EUE PIN [73.0MM] , WITH BRONZE GLAND, BRASS PACKING RING, AND PACK-OFF RING, WITHOUT PACKING & PACK-OFF ELEMENT	0664-1420-53	0664-1420-57
3″-8V LP PIN [88.9MM], WITH BRONZE GLAND, BRASS PACKING RING, AND PACK-OFF RING, WITHOUT PACKING & PACK-OFF ELEMENT	0664-1430-53	0664-1430-57

Description	1-1/4" Rod	1-1/2" Rod
2-3/8″ EUE PIN [60.3MM], WITH DELRIN GLAND, PACKING RING, & PACK-OFF RING, WITHOUT PACKING & PACK-OFF ELEMENT	0664-1410-63	0664-1410-67
2-7/8" EUE PIN [73.0MM], WITH DELRIN GLAND, PACKING RING, & PACK-OFF RING, WITHOUT PACKING & PACK-OFF ELEMENT	0664-1420-63	0664-1420-67
3″-8V LP PIN [88.9MM], WITH DELRIN GLAND, PACKING RING, & PACK-OFF RING, WITHOUT PACKING & PACK-OFF ELEMENT	0664-1430-63	0664-1430-67

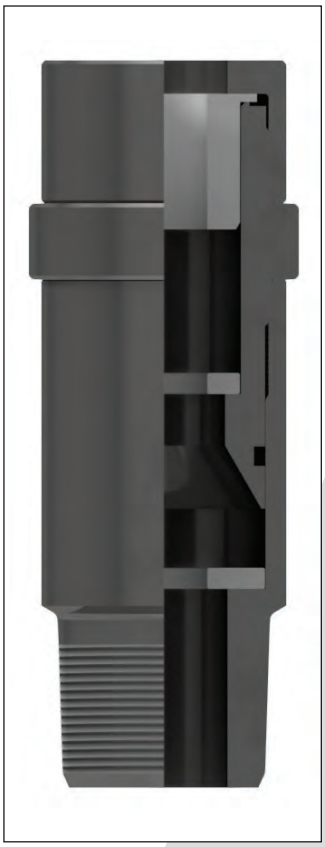

DUAL-PAC STUFFING BOX PARTS LIST

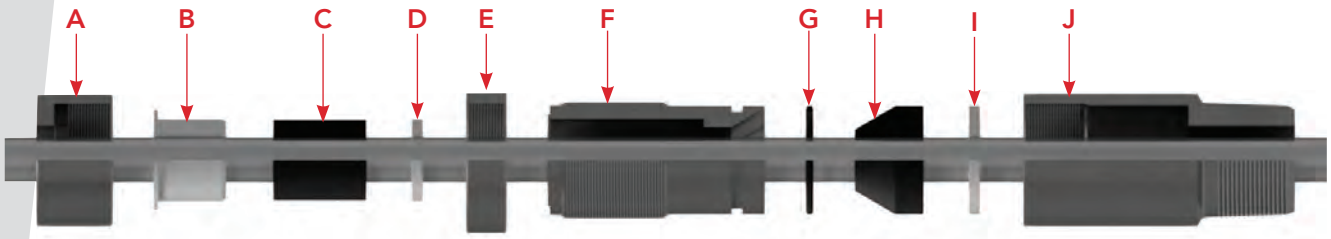

Item	Description	Qty	1-1/4" Rod	1-1/2" Rod
A	CAP, STEEL	1	0664-0200-01	0664-0200-01
B	LOCK NUT, STEEL	1	0664-0300-01	0664-0300-01
C	GLAND, BRONZE	1	0664-0600-03	0664-0600-07
D	PACKING	1	0664-0800-93	0664-0800-97
E	PACKING RING, BRASS	1	0664-1300-03	0664-1300-07
F	RETAINER	1	0664-0401-00	0664-0401-00
G	O-RING	2	0664-0500-00	0664-0500-00
H	PACK-OFF ELEMENT	1	0664-0900-03	0664-0900-07
I	PACK-OFF RING	1	0664-0700-03	0664-0700-07
J	BODY WITH 2-3/8" EUE PIN [60.3MM]	1	0664-0110-50	0664-0110-50
	BODY WITH 2-7/8" EUE PIN [73.0MM]		0664-0120-50	0664-0120-50
	BODY WITH 3"-8V PIN [88.9MM]		0664-0130-40	0664-0130-40
	BODY WITH 2-9/16-5000 FLANGE		0664-0131-40	0664-0131-40

B	OPTIONAL LOCK NUT, STEEL, SLIM (Not pictured)	1	0664-0300-02	0664-0300-02

COM-PAC STUFFING BOX ASSEMBLIES

Description	1-1/4" Rod	1-1/2" Rod
2-3/8" EUE PIN [60.3MM], WITH BRONZE GLAND & BRASS PACKING RING, WITHOUT PACKING	0664-1010-53	0664-1010-57
2-7/8" EUE PIN [73.0MM] , WITH BRONZE GLAND & BRASS PACKING RING, WITHOUT PACKING	0664-1020-53	0664-1020-57
3"-8V LP PIN [88.9MM], WITH BRONZE GLAND & BRASS PACKING RING, WITHOUT PACKING	0664-1030-53	0664-1030-57

Description	1-1/4" Rod	1-1/2" Rod
2-3/8" EUE PIN [60.3MM], WITH BRONZE GLAND & BRASS PACKING RING, WITHOUT PACKING	0664-1010-63	0664-1010-67
2-7/8" EUE PIN [73.0MM] , WITH BRONZE GLAND & BRASS PACKING RING, WITHOUT PACKING	0664-1020-63	0664-1020-67
3"-8V LP PIN [88.9MM], WITH BRONZE GLAND & BRASS PACKING RING, WITHOUT PACKING	0664-1030-63	0664-1030-67

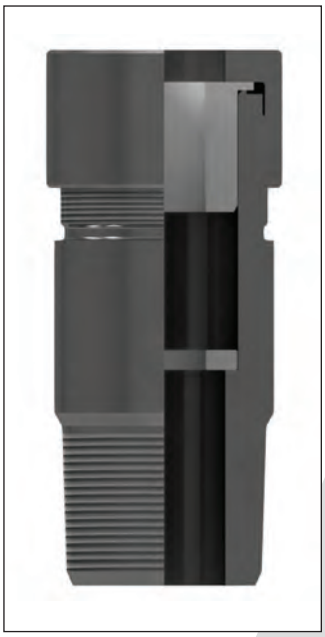

COM-PAC STUFFING BOX PARTS LIST

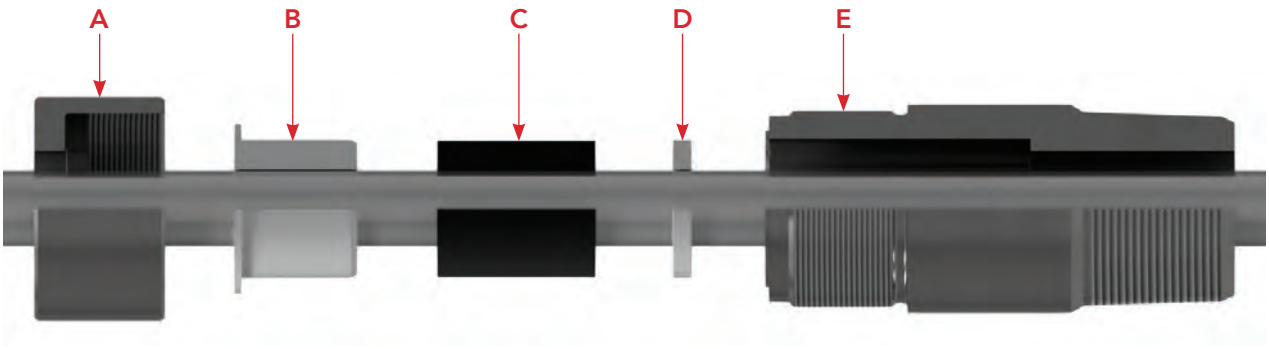

Item	Description	Qty	1-1/4" Rod	1-1/2" Rod
A	CAP, STEEL	1	0664-0200-01	0664-0200-01
B	GLAND, BRONZE	1	0664-0600-03	0664-0600-07
C	PACKING	1	0664-0800-93	0664-0800-97
D	PACKING RING, BRASS	1	0664-1300-03	0664-1300-07
E	BODY WITH 2-3/8" EUE PIN [60.3MM]	1	0664-0111-20	0664-0111-20
	BODY WITH 2-7/8" EUE PIN [73.0MM]		0664-0121-20	0664-0121-20
	BODY WITH 3"-8V PIN [88.9MM]		0664-0131-20	0664-0131-20
	BODY WITH 2-9/16-5000 FLANGE (Not pictured)		0664-0132-40	0664-0132-40

MISALIGNMENT UNION COM-PAC STUFFING BOX ASSEMBLIES

Description	Part Number
2-7/8" EUE PIN [73.0MM], WITHOUT CAP, GLAND, PACKING, OR PACKING RING	0664-0064-42
3-1/2" EUE PIN [88.9MM], WITHOUT CAP, GLAND, PACKING, OR PACKING RING	0664-0064-45

PACKING CHAMBER OPTIONS

Item	Description	Material	1-1/4" Rod	1-1/2" Rod
A	CAP	STEEL	0664-0200-01	0664-0200-01
B	GLAND	BRONZE	0664-0600-03	0664-0600-07
	GLAND SPLIT	BRONZE	0664-0601-03	0664-0601-07
	GLAND	DELRIN	0664-0600-63	0664-0600-67
C	PACKING	LUBRIKUP FLUID SEAL	0664-0800-93	0664-0800-97
D	PACKING RING	BRASS	0664-1300-03	0664-1300-07
	PACKING RING SPLIT	BRASS	0664-1300-23	0664-1300-27
	PACKING RING	DELRIN	0664-1300-63	0664-1300-67

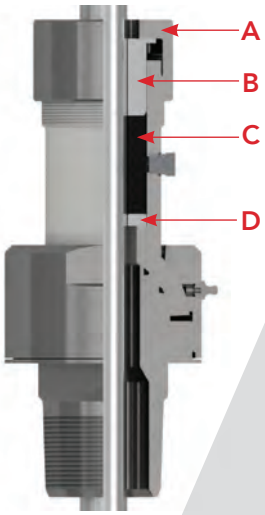

MISALIGNMENT UNION COM-PAC STUFFING BOX

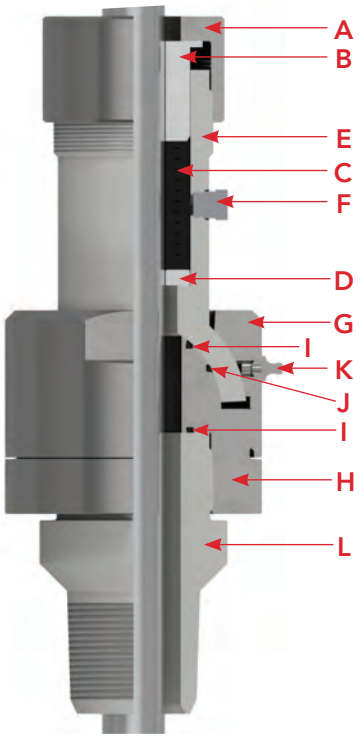

Item	Description	Qty	1-1/4" Rod	1-1/2" Rod
A	CAP, STEEL	1	0664-0200-01	0664-0200-01
B	GLAND, BRONZE	1	0664-0600-03	0664-0600-07
C	PACKING	1	0664-0800-93	0664-0800-97
D	PACKING RING, BRASS	1	0664-1300-03	0664-1300-07
E	SWIVEL, COM-PAC	1	0664-0064-02	0664-0064-02
F	PIPE PLUG, 1/4”-18 NPT	1	—	—
G	SWIVEL COVER	1	0664-0064-11	0664-0064-11
H	SWIVEL BUSHING	1	0664-0064-20	0664-0064-20
I	O-RING, SMALL	2	0664-3305-20	0664-3305-20
J	O-RING, LARGE	1	0699-2233-00	0699-2233-00
K	GREASE ZERK, 1/8”-27 NPT	1	—	—
L	CONNECTOR, 2-3/8” EUE PIN	1	0626-3799-10	0626-3799-10
	CONNECTOR, 2-7/8” EUE PIN	1	0626-3799-20	0626-3799-20
	CONNECTOR, 3-1/2” EUE PIN	1	0626-3799-30	0626-3799-30
	CONNECTOR, 3"-8V LP PIN	1	0626-3799-31	0626-3799-31

UNIVERSAL PUMP HOLD-DOWN (UPHD)

Dura Products™
A DISTRIBUTION NOW™ COMPANY

DESCRIPTION AND OPERATION

The Universal Pump Hold-Down system consists of the pump seating nipple (PSN) run on the tubing string, and a hold-down assembly for the pump, run after the tubing is installed. The pump can be either a PC (progressive cavity) or a reciprocating sucker-rod pump. A different hold-down mechanism is used for each pump type (see Hold-Down section, Friction Seal for the sucker-rod pump hold-down).

The PC pump Universal hold-down features a torque holding collet, metal to metal axial hold-down rings, and debris barriers to prevent sand build up. The hold-down can be run above or below the stator tube, and with an optional flush-by tube and rod centralizer at the top.

For either a sucker-rod or progressive cavity pump the installation is very simple – set down to install, and straight pull to retrieve – no additional manipulation of the rod string is required. The axial force can be adjusted to suit the application.

The design can be easily customized for any given tubing diameter, allowing full selective nipple I.D. and is suitable for deviated wellbores and sour environments. The design features a one piece nipple and inner mandrel with field proven metal-to-metal seals. The hold-down mechanism has been carefully designed to provide reliable operation and release in the presence of sand and other solids.

PUMP SEATING NIPPLE (PSN)

Tubing Size	Thread Weight	PSN OD	Seal Bore	Part Number
3.500 EUE [88.9mm]	9.30 lbs/ft	4.500 [114.3mm] max.	2.790 [70.87mm]	7035-EU00-0020
4.500 EUE [114.3mm]	12.75 lbs/ft	5.563 [141.3mm] max.	3.790 [96.27mm]	7045-EU00-0020

PC PUMP HOLD-DOWN INFORMATION

PSN Size	Thread Weight	End Connections	PSN Seal Bore	ID Min.
3.500 EUE [88.9mm]	9.30 lbs/ft	2.375 NUE	2.790 [70.87mm]	1.62 [41.15mm]
4.500 EUE [114.3mm]	12.75 lbs/ft	2.875 EUE	3.790 [96.27mm]	2.30 [58.42mm]

PSN Size	# of Hold-Down Rings	Part Numbers	
		Top Hold-Down	Bottom Hold-Down
3.500 [88.9mm]	2	7035-A001-0020	—
4.500 [114.3mm]	2	7045-A002-0020	7045-A004-0020
4.500 [114.3mm]	4	7045-A003-0020	—

Contact plant for other hold-down options.

VALVES

Dura Products™
A DISTRIBUTION NOW™ COMPANY

STANDING, API 2 CUP

Item	Description	# Req'd	1-3/4"	2-1/4"	2-3/4"
A	Open Cage	1	0620-1702-X0	0620-2202-X0	0620-2702-X0
B	Ball and Seat	1	1-3/4" API	2-1/4" API	2-3/4 API
C	Mandrel	1	0658-1756-X0	0658-2256-X0	0658-2756-X0
D	Cup, 1-3/4-10, Composite	2	2231-0168-30	—	—
	Cup, 2-1/4-10, Composite	2	—	2231-0168-60	—
	Cup, 2-3/4-10, Composite	2	—	—	2231-0785-90
E	Seating Cup Ring	1	0658-1004-X0	0658-2004-X0	0658-3004-X0
F	Lock Nut	1	0658-1005-X0	0658-2005-X0	0658-3005-X0
G	Tapered Coupling	1	0658-1006-X0	0658-2006-X0	0658-3006-X0
API LP Thread Connection			1"	1-1/4"	1-1/2"

MATERIAL CODES	
10XX	1
41X0	2
304 SS	3
NCA 400	5
PTFE Steel	6
316 SS	7

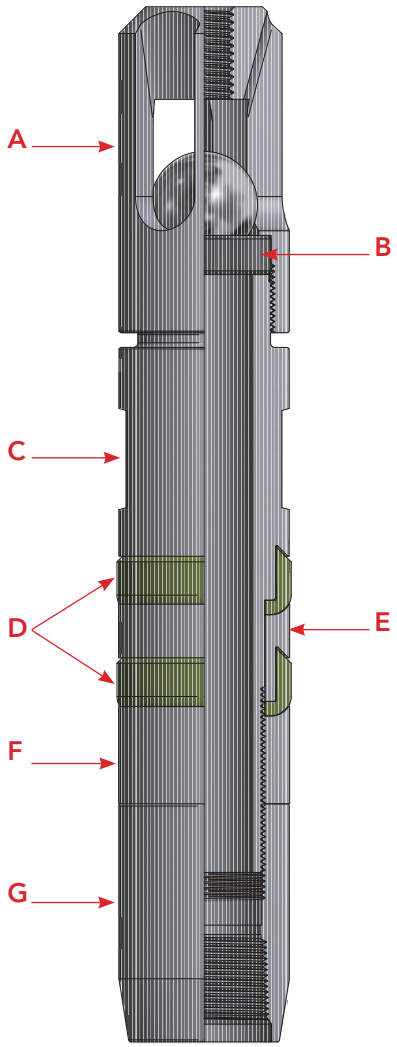

STANDING, API 2 CUP, INSERT CAGE

Item	Description	# Req'd	1-3/4"	2-1/4"	2-3/4"
A	Bushing, Open Cage	1	0620-1777-X0	0620-2277-X0	0620-2777-X0
B	Gasket	1	0698-0931-00	0698-0933-00	0698-1041-00
C	Insert	1	0622-1759-79	0622-2259-79	0622-2759-79
D	Shell	1	0622-1773-X0	0622-2273-X0	0622-2773-X0
E	Ball and Seat [1]	1	1-3/4 ALT	2-1/4 ALT	2-3/4 ALT
F	Mandrel	1	0658-1756-X0	0658-2256-X0	0658-2756-X0
G	Cup, 1-3/4-10, Composite	2	2231-0168-30	—	—
	Cup, 2-1/4-10, Composite	2	—	2231-0168-60	—
	Cup, 2-3/4-10, Composite	2	—	—	2231-0785-90
H	Seating Cup Ring	1	0658-1004-X0	0658-2004-X0	0658-3004-X0
I	Lock Nut	1	0658-1005-X0	0658-2005-X0	0658-3005-X0
J	Tapered Coupling	1	0658-1006-X0	0658-2006-X0	0658-3006-X0
API LP Thread Connection			1"	1-1/4"	1-1/2"

1- Alternate sized ball must be used for insert cages. The alternate ball is smaller than the standard API ball size.

MATERIAL CODES	
10XX	1
41X0	2
304 SS	3
NCA 400	5
PTFE Steel	6
316 SS	7

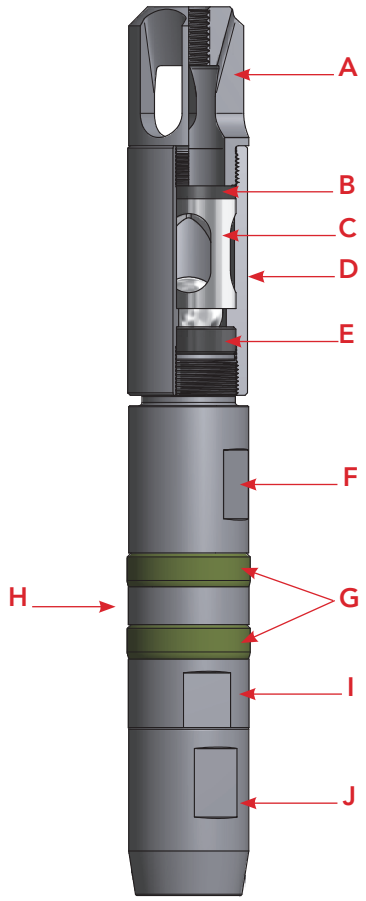

STANDING, API BOTTOM LOCK MECHANICAL

Item	Description	2-3/8"	2-7/8"	3-1/2"	4-1/2"
A	Open Cage	0620-1702-X0	0620-2202-X0	0620-2702-X0	0620-3702-X0
B	Ball & Seat	1-3/4 API	2-1/4 API	2-3/4 API	3-3/4" API
C	Bushing	0658-1013-X0	0658-2013-X0	0658-3013-X0	0658-4013-X0
D	Brass Seat	0658-1014-40	0658-2014-40	0658-3014-40	0658-4014-40
E	Mandrel	0658-1015-XX	0658-2015-XX	0658-3015-XX	0658-4015-XX

MATERIAL CODES	
10XX	1
41X0	2
304 SS	3
NCA 400	5
PTFE Steel	6
316 SS	7
Material Codes - Mandrel	
41X0	20 [1]
17-4 PH	30

1- For 2-7/8" the material code is 21.

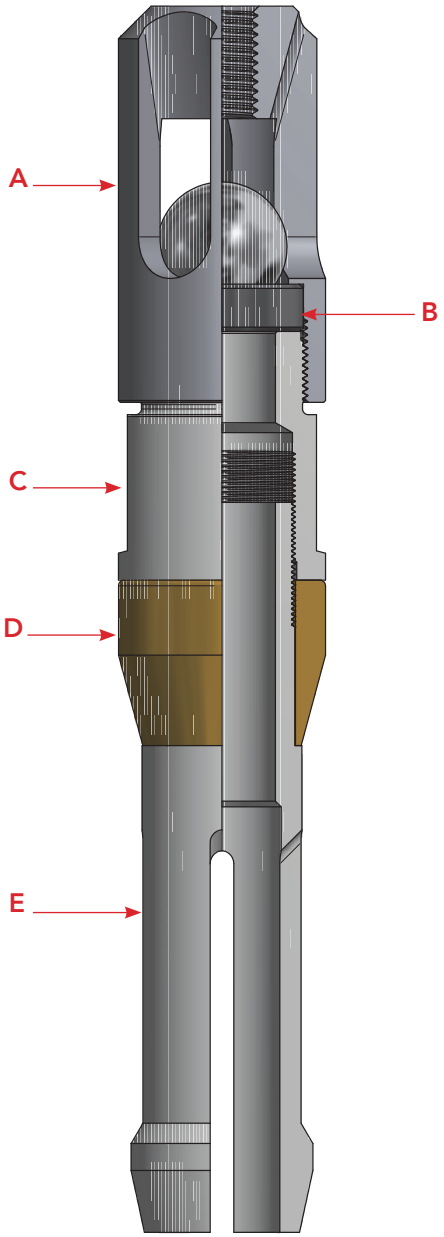

STANDING, API BOTTOM LOCK MECHANICAL, INSERT CAGE

Item	Description	2-3/8"	2-7/8"	3-1/2"	4-1/2"
A	Bushing, Open Cage	0620-1777-X0	0620-2277-X0	0620-2777-X0	0620-3777-X0
B	Gasket	0698-0931-00	0698-0933-00	0698-1041-00	0698-1041-07
C	Insert	0622-1759-79	0622-2259-79	0622-2759-79	0622-3759-79
D	Shell	0622-1773-X0	0622-2273-X0	0622-2773-X0	0622-3766-X0
E	Ball and Seat [1]	1-3/4 ALT	2-1/4 ALT	2-3/4 ALT	3-3/4" ALT
F	Bushing	0658-1013-X0	0658-2013-X0	0658-3013-X0	0658-4013-X0
G	Brass Seat	0658-1014-40	0658-2014-40	0658-3014-40	0658-4014-40
H	Mandrel	0658-1015-XX	0658-2015-XX[2]	0658-3015-XX	0658-4015-XX

1- Alternate sized ball must be used for insert cages. The alternate ball is smaller than the standard API ball size.

MATERIAL CODES	
10XX	1
41X0	2
304 SS	3
NCA 400	5
PTFE Steel	6
316 SS	7
Material Codes - Mandrel	
41X0	20[2]
17-4 PH	30

2- For 2-7/8" tubing material code is '21'.

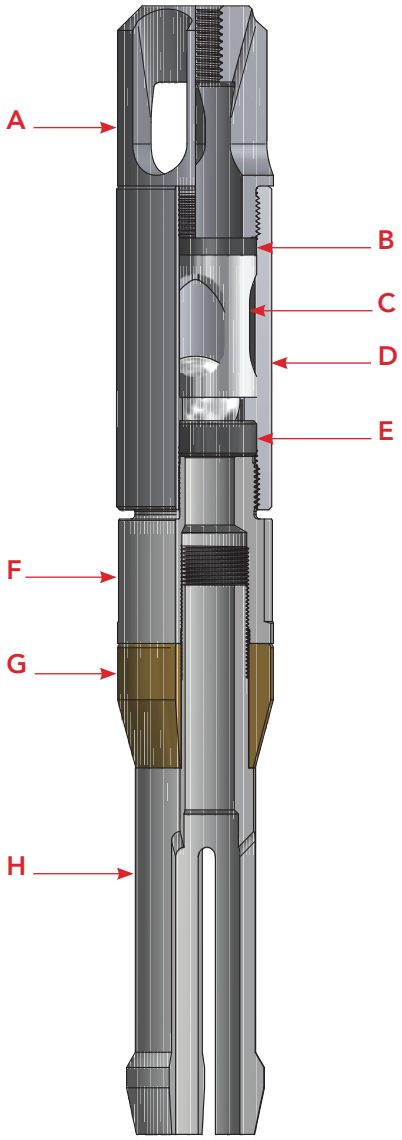

TOP CHECK

The Top Check Valve can be attached to the top of any rod insert pump. The Top Check Valve can be used on both top and bottom hold-down pumps. The 2-3/8" valve consists of a brass drop and adapter bushing with a hardened seat surface; the 2-7/8" valve consists of a brass drop and hardened stainless seat. The drop in the Top Check Valve is lifted off the seat by fluid above the plunger on the upstroke; and as the plunger starts the down-stroke the drop re-seats, relieving the hydrostatic head off the travelling valve and allows it to open sooner, improving pump efficiency, especially with gassy and foamy fluid. This in turn reduces some of the shock loading seen in fluid pound and gas pound, helping to eliminate compression in the bottom of the sucker rod string and reducing tubing and rod wear. Although the Top Check Valve can be used with standard valve rod, spray-metal valve rod is recommended for optimal performance.

Advantages

1. Helps reduce gas locking.
2. Helps in increasing barrel fillage.
3. Helps to reduce fluid pound and compressive rod loading.
4. Helps reduce tubing and rod wear by reducing compressive load on sucker rod string.

		2-3/8" Tubing		2-7/8" Tubing	
Item	**Description**	**11/16" VR**	**7/8" VR**	**7/8" VR**	**1-1/16" VR**
A	Drop	0698-3101-X0	0698-3101-X1	0698-3201-X0	0698-3201-X1
B	Housing	0698-3102-X0	0698-3102-X0	0698-3202-X0	0698-3202-X0
C	Seat, Hardened Stainless	—	—	0698-3203-30	0698-3203-30
D	Bushing	0698-3104-X0	0698-3104-X0	—	—
Guide	For Valve Rod	0658-1026-X0	0658-1026-X1	0658-2026-X0	0658-2026-X1
Mandrel	Top Hold-Down Only	0658-1001-X0	0658-1001-X0	0658-2001-X0	0658-2001-X0
Connector	Bottom Hold-Down Only	0626-1501-1X	0626-1501-1X	0626-2001-1X	0626-2001-1X

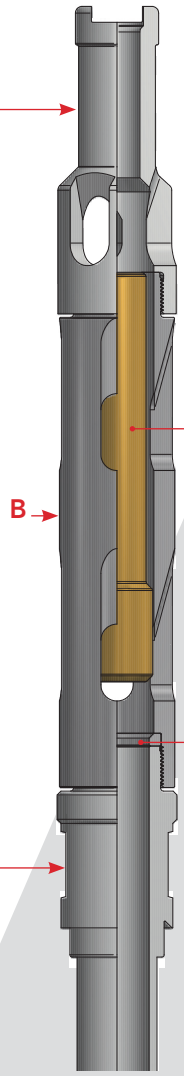

FOR 2-3/8" TOP CHECK BUSHING (ITEM D) IS USED TO CONNECT THE HOUSING TO THE MANDREL, AND ACTS AS THE DROP SEAT.

Drop - Material Code	
Brass	4
Boronized	8
Hardened 41X0	9
Material Code	
41X0	2
304 SS	3
NCA 400	5
PTFE Steel	6
316 SS	7

SPOOL CHECK

The spool check valve was designed to assist the travelling valve in opening during the down stroke on gaseous wells. The gaseous fluid in the pump chamber tends to delay the opening of the travelling valve because of its compressibility. The pressure above the plunger is greater than the pressure below the plunger. With standard pumps much of the down stroke is used to compress the mixture in the pump chamber. The spool check valve removes the pressure off the plunger valve allowing it to open sooner and increases the pump efficiency.

The spool check valve is for bottom hold-down pumps, works as an exellent sand check, and is available in brass or hardened stainless steel.

Item	Description	2-3/8"	2-3/8"	2-7/8"
A	**Guide**	11/16" VR	7/8" VR	7/8" VR
		0658-1026-X6	0658-1026-X7	0658-2026-X7
B	**Spool**			
	Hardened Stainless	0658-2050-34	0658-2050-37	0658-2550-37
	Brass	—	—	0658-2550-47
C	**Connector**	0626-1501-1X	0626-1501-1X	0626-2001-1X
	O.D. Fish Neck*	1-1/2"	1-1/2"	1-5/8"
	Bottom End Connection	1-1/2" RW Barrel	1-1/2" RW Barrel	2" RW Barrel

* For complete Fish Neck dimensions see the 'Guides' section.

MATERIAL CODES	
10XX	1
41X0	2
304 SS	3
Brass	4
NCA 400	5
PTFE Steel	6
316 SS	7

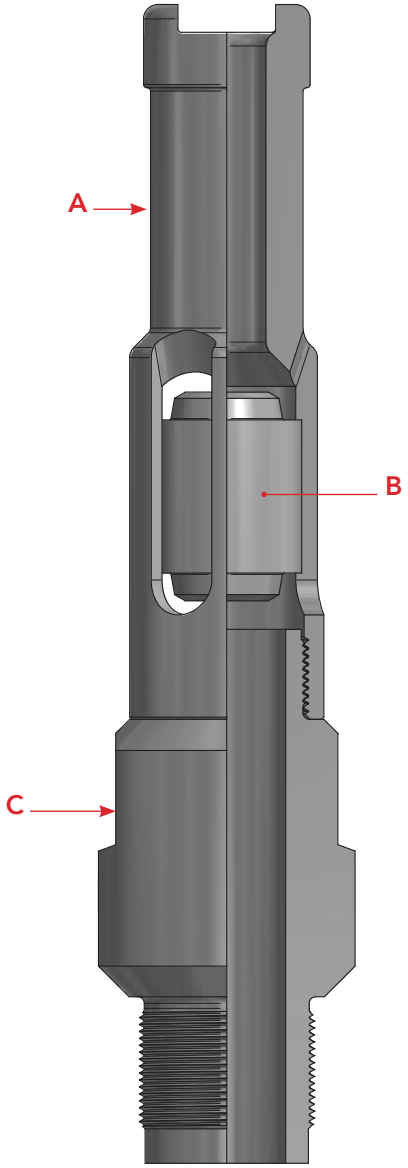

WIPERS

Dura Products™
A DISTRIBUTION NOW® COMPANY

PLUNGER WIPER, PIN END

Pump Bore	A-Upper Bushing	B-Lower Cage Bushing	C-Wiper Ring	Shell Cage[1]	Plunger[2]
1-1/4"	0608-9512-X0	0608-9712-X0	0698-1120-08	0622-1273-X0	0629-120X-XX
1-1/2"	0608-9515-X0	0608-9715-X0	0698-1120-09	0622-1573-X0	0629-140X-XX
1-3/4"	0608-9517-X0	0608-9717-X0	0698-1120-12	0622-1773-X0	0629-170X-XX
2"	0608-9520-X0	0608-9720-X0	0698-1120-10	0622-2073-X0	0629-190X-XX
2-1/4"	0608-9522-X0	0608-9722-X0	0698-1120-11	0622-2273-X0	0629-220X-XX

1- Additional items required for the shell cage assembly. See section C.
2- X-XX Indicates the length and fit of the plunger. See section P for more plungers.

MATERIAL CODES	
10XX	1
41X0	2
304 SS	3
NCA 400	5
PTFE Steel	6
316 SS	7

PLUNGER WIPER, PIN END, COMPACT

Pump Bore	A-Upper Bushing	B-Lower Cage Bushing	C-Wiper Ring	Shell Cage[1]	Plunger[2]
2"	0699-8701-X1	0699-8703-X1	0698-1120-10	0622-2073-X0	0629-190X-XX

1- Additional items required for the shell cage assembly. See section 'Cage' section for additional details.
2- X-XX Indicates the length and fit of the plunger. See 'Plunger' section for additional details.

MATERIAL CODES	
10XX	1
41X0	2
304 SS	3
NCA 400	5
PTFE Steel	6
316 SS	7

PLUNGER WIPER, BOX END, COMPACT

Pump Bore	A-Upper Bushing	B-Lower Cage Bushing	C-Wiper Ring	Shell Cage[1]	Plunger[2]
2"	0699-8701-X0	0699-8703-X0	0698-1120-10	0622-2073-X1	0649-190X-XX

1- Additional items required for the shell cage assembly. See section 'Cage' section for additional details.
2- X-XX Indicates the length and fit of the plunger. See 'Plunger' section for additional details.

MATERIAL CODES	
10XX	1
41X0	2
304 SS	3
NCA 400	5
PTFE Steel	6
316 SS	7

PLUNGER WIPER, BOX END, COMPACT, ALLOY 90 RINGS

Pump Bore	A- Upper Connector	B-Lower Connector	C-Alloy 90 Rings	Shell Cage	Plunger
2"	0699-8725-X0	0699-8726-X1	0699-8724-10	0622-2073-X0	0649-190X-XX
2-3/4"	0699-8727-X0	0699-8727-X0	0699-8728-90	0622-2773-X0	0649-270X-XX
3-1/4"	0699-8732-X0	0699-8732-X0	0699-8733-90	0622-3273-X0	0649-320X-XX

*Other Materials Available Upon Request

MATERIAL CODES	
10XX	1
41X0	2
304 SS	3
NCA 400	5
PTFE Steel	6
316 SS	7

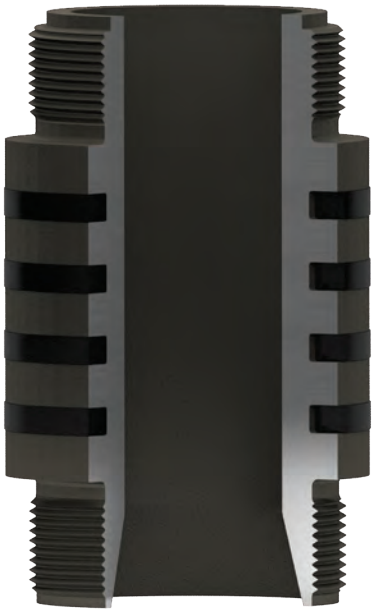

PLUNGER WIPER, PIN END, PRESSURE ACTUATED RING

Fittings		Rings[1]	
Size	Part Number	Green Nylon	Black XT
1.50	0652-1404-X0	0652-1400-20	0652-1400-50
1.75	0652-1704-X0	0652-1700-20	0652-1700-50
2.00	0652-1904-X0	0652-1900-20	0652-1900-50

1- For information on ring material see section 'P'

MATERIAL CODES	
10XX	1
41X0	2
304 SS	3
NCA 400	5
PTFE Steel	6
316 SS	7

CUP ADAPTER, PIN END, 2 CUP

Description		QTY	1-1/2"	1-3/4"	2"
A	**Bushing**	1	0608-2015-X0	0608-1417-X0	0608-1620-X0
B	**Lock-Nut**	1	0640-1507-X0	0640-1707-X0	0640-2007-X0
C	**Top Spacer**	1	0640-1530-X0	0640-1730-X0	0640-2030-X0
D	**Middle Spacer**	1	0640-1530-X1	0640-1730-X1	0640-2030-X1
E	**Bottom Spacer**	1	0640-1530-X2	0640-1730-X2	0640-2030-X2
F	**Cup**	2			
	1.50 -.015"		2231-1406-10	—	—
	1.75 -.015"		—	2231-1735-00	—
	2.00 -.015"		—	—	2231-8001-40
G	**Mandrel**	1	0608-1530-X0	0608-1730-X0	0608-2030-X0
–	**Assembly in Steel**	—	0640-1502-10	0640-1702-10	0640-2002-70
–	**Assembly in 316 SS**	—	0640-1502-70	0640-1702-70	0640-2002-70
Alternative Plastic Cups (see section C for full listing)					
F	**Alternate Cups**		**1-1/2"**	**1-3/4"**	**2"**
	1.50 -0.30"		—	—	—
	1.75 -.030"		—	2231-1735-30	—
	2.00 -.030"		—	—	2231-8001-30

Note: See section 'P' for pin-end plunger listings.

MATERIAL CODES	
10XX	1
41X0	2
304 SS	3
NCA 400	5
PTFE Steel	6
316 SS	7

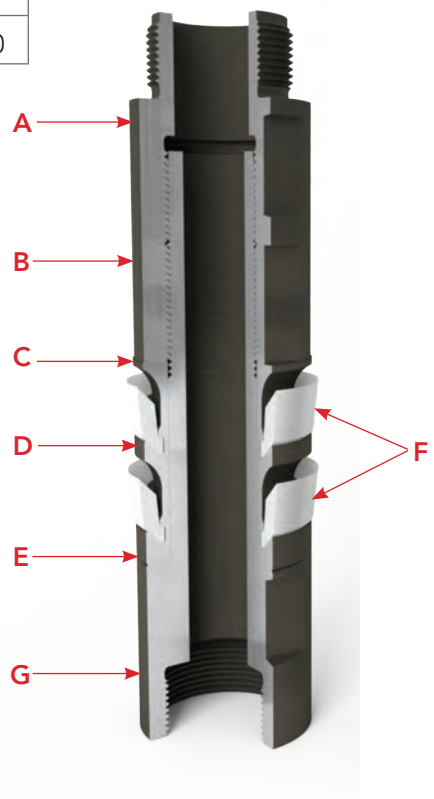

Dura Products
A DISTRIBUTIONNOW COMPANY

CUP ADAPTER, PIN END, 6 CUP

	Description	QTY	1-1/2"	1-3/4"	2"
A	**Bushing**	1	0608-2015-X0	0608-1417-X0	0608-1620-X0
B	**Lock-Nut**	1	0640-1507-X0	0640-1707-X0	0640-2007-X0
C	**Top Spacer**	1	0640-1530-X0	0640-1730-X0	0640-2030-X0
D	**Middle Spacer**	5	0640-1530-X1	0640-1730-X1	0640-2030-X1
E	**Bottom Spacer**	1	0640-1530-X2	0640-1730-X2	0640-2030-X2
F	**Cup**	6			
	1.50 -.015"		2231-1406-10		
	1.75 -.015"			2231-1735-10	
	2.00 -.015"				2231-8001-40
G	**Mandrel**	1	0608-1536-X0	0608-1736-X0	0608-2036-X0
–	**Assembly in Steel**	—	0640-1506-10	0640-1706-10	0640-2006-10
–	**Assembly in 316 SS**	—	0640-1506-70	0640-1706-70	0640-2006-70
Alternative Plastic Cups (see section C for full listing)					
F	**Alternate Cups**		**1-1/2"**	**1-3/4"**	**2"**
	1.50 -.030"		—		
	1.75 -.030"			2231-1735-30	
	2.00 -.030"				2231-8001-30

Note: See section 'P' for pin-end plunger listings.
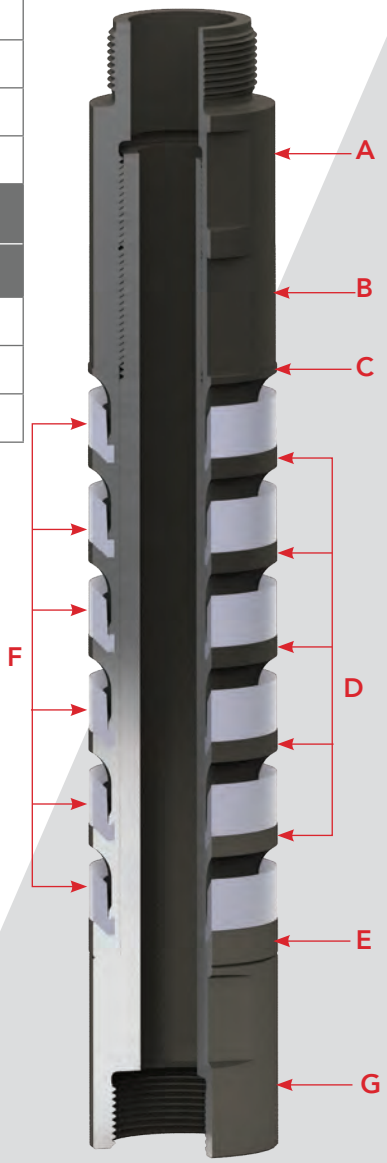
MATERIAL CODES	
10XX	1
41X0	2
304 SS	3
NCA 400	5
PTFE Steel	6
316 SS	7